# FX

Reservdelslista
Spare parts list
Ersatzteilliste
Onderdelenlijst
Liste de pièce de rechange
Listino di prezzi de ricambio

ÖVERUM

| Sida<br>Seite<br>Page<br>Page | Bild<br>Bild<br>Fig.No.<br>Fig.Nº. | Typ | Innehålsförtekning | Inhaltsverzeichnis | Index of contents | Table des matieres |
|---|---|---|---|---|---|---|
| 3 | 529, 542 | | VÄNDCYLINDER | WENDEZYLINDER | REVERSING | VÉRIN CPL. |
| 5 | 1069 | FX | HYDRAULISK SIDOREGLERING | HYDRAULISCHE SCHNITTBREITEN-VERSTELLUNG | HYDRAULIC FRONT-FURROW ADJUSTER | DEPORTATEURE HYDRAULIQUE |
| 7 | 1057 | FX | TOPP | KOPSTÜCK | HEADSTOCK | TETE |
| 9 | 1070 | FX | DJUPINDIKERING | TIEFE INDIKATOR | DEPTH INDICATOR | INDICATION DE LA PROFONDEUR |
| 11 | 445 | H | ÅSHUS | GRINDELGEHÄUSE | BEAM HOUSING | SUPPORT D'AGE |
| 13 | 516 | FX | STENSÄKRINGS-HYDRAULIK | HYDRAUIISCHER STEINSICHERUNG | HYDRAULIC STONE TRIP | DISPOSITIF DE SECURITE HYDRAULIQUE |
| 15 | 715 | | FRONTHJUL | FRONT RAD | FRONT WHEEL | ROUE F FRONTALE |
| 17 | 519 | | SKIVRIST | SCHEIBENSECH | DISC COULTER | COUTRE CIRCULAIRE |
| 19 | 15, 143, 470 | XL,XU,XS,UC | SKUMVINGE | EINLEGER-STREICHBLECH | COVERBOARD | DEFLECTEUR |
| 21 | 1010 | | SKUMRIST | VORSCHÄLER | SKIMMER | RASETTE |
| 23 | 103d | XL,XLP | PLOGKROPP | PFLUGKÖRPER | PLOUGH BOTTOMS | CORPS DE CHARRUE |
| 25 | 660 | XU | PLOGKROPP | PFLUGKÖRPER | PLOUGH BOTTOMS | CORPS DE CHARRUE |
| 27 | 16d | UC | PLOGKROPP | PFLUGKÖRPER | PLOUGH BOTTOMS | CORPS DE CHARRUE |
| 29 | 665 | XS | PLOGKROPP | PFLUGKÖRPER | PLOUGH BOTTOMS | CORPS DE CHARRUE |
| 31 | 527 | | SPEGEL | SPIEGEL | MIRROR | MIROIR |

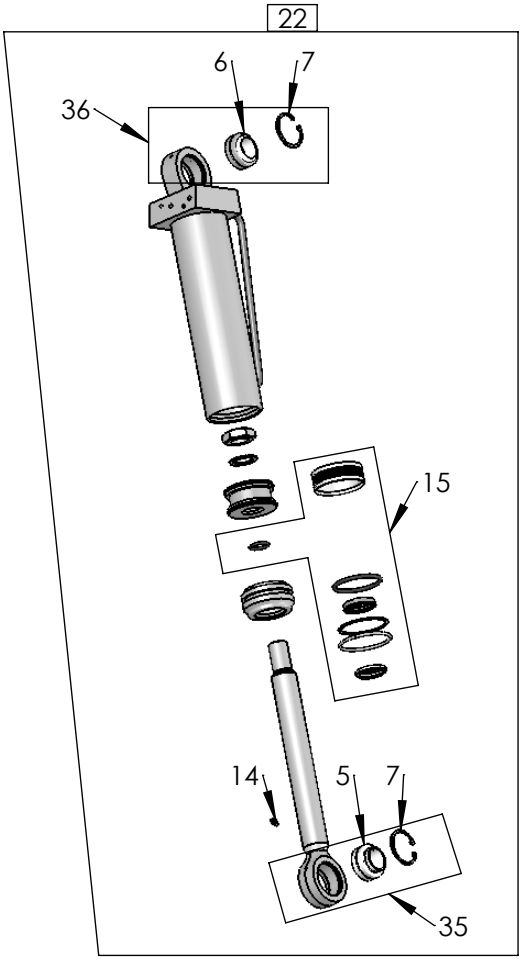


529

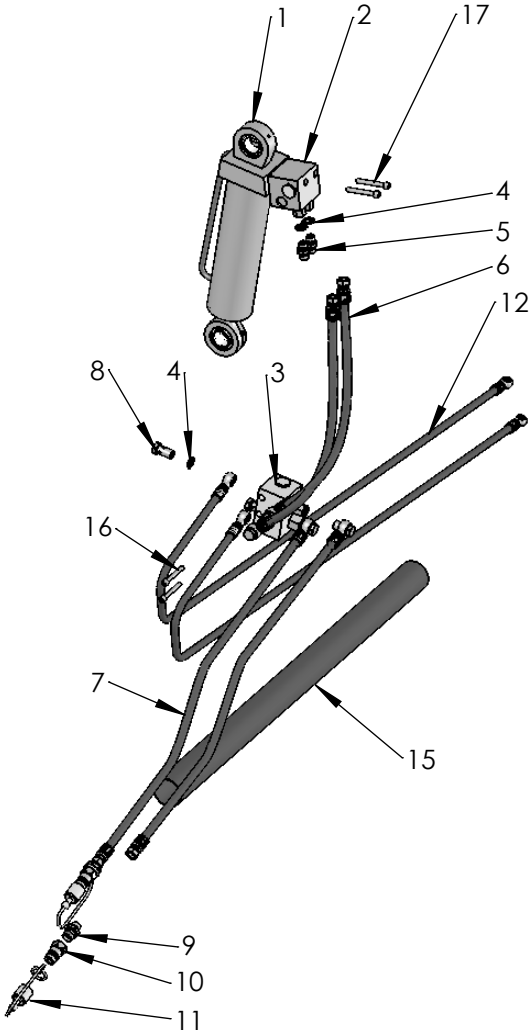


542

| Pos nr<br>Pos.Nr<br>Ref.No<br>Fig.Nº. | Detalj nr<br>Best.Nr<br>Part No<br>Code Nº. | | Benämning | Bezeichnung | Description | Description |
|---|---|---|---|---|---|---|
| **529** | | | **VÄNDCYLINDER** | **WENDEZYLINDER** | **REVERSING** | **VÉRIN CPL.** |
| 5 | 1659 13 08 01 | | Lager | Lager | Bearing | Palier |
| 6 | 1658 64 05 03 | | Lager | Lager | Bearing | Palier |
| 7 | 735 31 44 11 | | Låsring | Kopfring | Lock ring | Bague d'arrêt |
| 14 | 738 88 20 02 | | Smörjnippel | Schmiernippel | Grease nipple | Graisseur |
| 15 | 1659 46 68 00 | | Packningssats | Packungsgarnitur | Set of seals | Jeu de joints |
| 21 | 1652 55 26 00 | | Kolvstång monterad | Kolbenstange kompl. | Piston rod compl. | Tige de piston cpl. |
| 22 | 1652 55 14 50 | | Vändcyl. utan ventil | Wendezylinder | Reversing | Vérin cpl. |
| 35 | 1652 05 85 00 | | Kolvstångsöra kompl | Kolbenstange ohr kompl | Rod piston ear compl. | Tige de piston oreielle |
| 36 | 1659 69 45 00 | | Cylinderöra | Zylinder ohr | Cylinder ear | Vérin oreielle |
| **542** | | | **UTRÄTNINGSCYLINDER ÖVERVÄNDNING** | **ZENTRIRUNG-ZYLINDER** | **ALIGNMENT CYLINDER** | **VÉRIN D'ALIGNEM** |
| 1 | 1652 55 14 50 | | Vändcylinder utan ventil | Wendezylinder | Reversing cylinder | Vérin de retournement |
| 2 | 1652 70 04 50 | | Ventilblock | Ventilplatte | Valve manifold | Soupape |
| 3 | 1652 70 09 50 | | Ventilblock | Ventilplatte | Valve manifold | Soupape |
| 4 | 1659 44 17 00 | 3/8 | Tätningsbricka | Dichtungsscheibe | Sealing washer | Rondelle d'étanchéité |
| 5 | 1659 24 34 00 | 3/8-3/8 | Rak adapt | Verbindungsstück | Union | Raccord |
| 6 | 1652 14 29 00 | L=600<br>3/8-3/8 Banjo | Slang | Schlauch | Hose | Tuyau flexible |
| 7 | 1652 17 05 00 | L=1500<br>3/8-3/8 Banjo | Slang | Schlauch | Hose | Tuyau flexible |
| 8 | 1659 57 74 00 | 3/8 | Banjoskruv | Schwenkschraube | Banjo bolt | Vis |
| 9 | 1659 24 38 00 | 1/2-3/8 | Rak adapt | Verbindungsstück | Union | Raccord |
| 10 | 1657 48 14 00 | ISO-G1/2 | Handel | Schnellkupplung M | Quick coupling M | Raccord rapide M |
| 11 | 1657 83 83 00 | | Handelsskydd | Schutz | Guard | Protection |
| 12 | 1652 90 66 00 | L=2200 1/4-3/8 | Slang | Schlauch | Hose | Tuyau flexible |
| 15 | 1652 10 43 00 | | Skyddslang | Schlauch | Hose | Tuyau flexible |
| 16 | 725 54 65 01 | MC6S 8x70 | Skruv | Schraube | Bolt | Vis |
| 17 | 725 54 63 91 | MC6S 8x60 | Skruv | Schraube | Bolt | Vis |

# Hydraulisk uträtning
# Hydraulic alignment

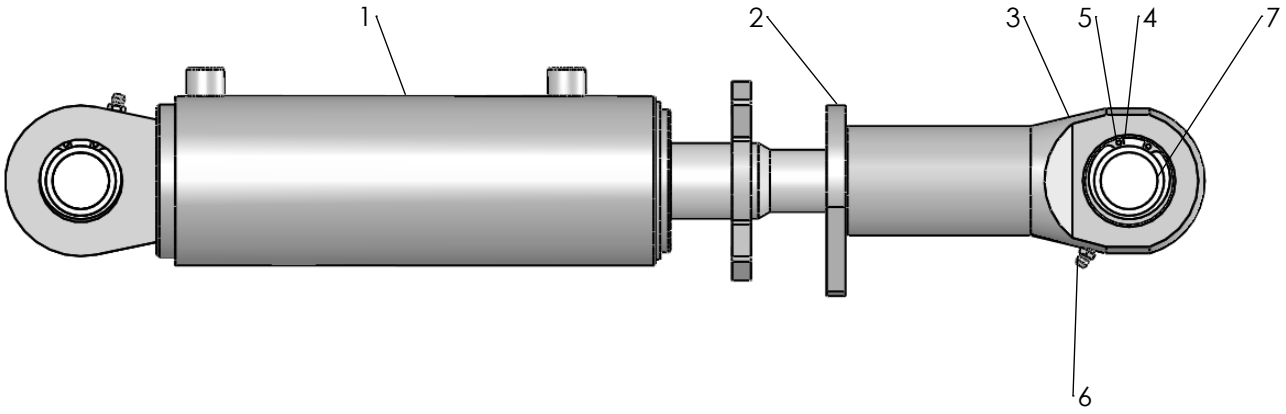


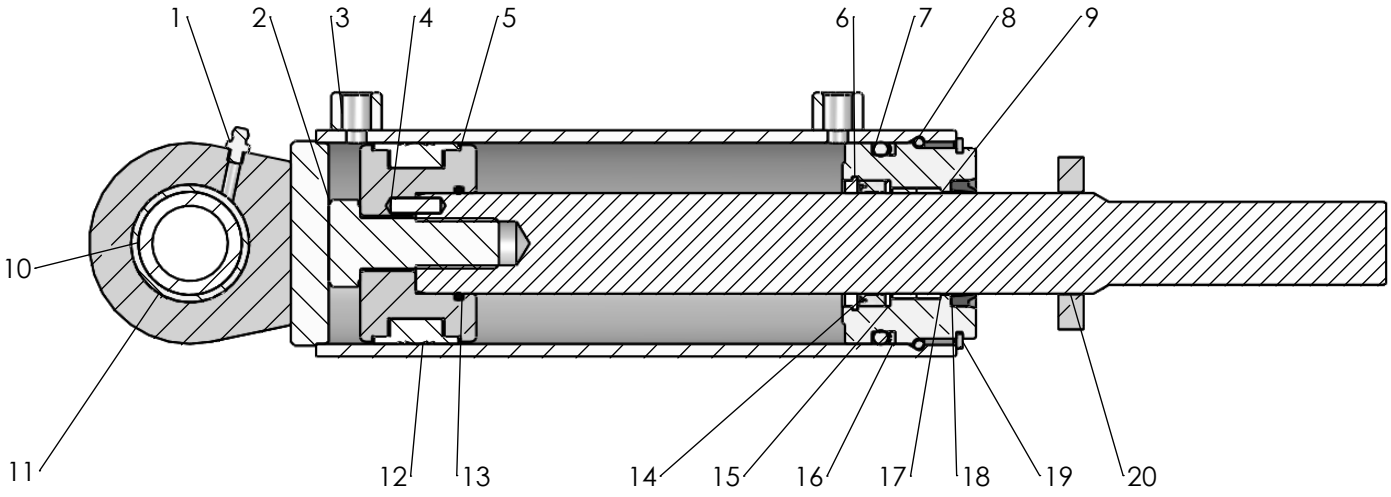


1069

| Pos nr/ Ref No | Detalj nr/ Part No | Benämning | Description |
|---|---|---|---|
| 1 | 4165 30487 50 | Hydraulcylinder DV, Ø80/40x145 | Hydraulic cylinder DA, Ø80/40x145 |
| 2 | 4165 30475 00 | Låsarm | Locking nut |
| 3 | 4165 30474 50 | Öra | Ear |
| 4 | 4165 86405 02 | Ledlager, Ø30 | Spherical plain bearing, Ø30 |
| 5 | 735 31 40 11 | Spårring SgH 47 FZB | Circlip DIN 472 - 47 x 1.75 |
| 6 | 738 88 10 01 | Smörjnippel, AH M6 FZB | Grease nipple, AH M6 FZB |
| 7 | 4165 22125 00 | Bricka, Ø30/37x6 | Washer, Ø30/37x6 |

| Pos nr/ Ref No | Detalj nr/ Part No | Benämning | Description |
|---|---|---|---|
| 1 | 738 88 10 01 | Smörjnippel, AH M6 FZB | Grease nipple, AH M6 FZB |
| 2 | 725 26 75 51 | Skruv M6S 20x 55- 8.8 FZB | Bolt ISO 4014 - M20 x 55 |
| 3 | 4165 30486 50 | Cylinderrör Ø80/90, komplett | Cylinder jacket |
| 4 | 4165 26363 00 | Cylindrisk pinne 6m6 | Pin |
| 5 | 4165 89199 00 | Kolv, Ø80/40 | Piston, Ø80/40 |
| 6 | 4165 93809 00 | Låsring, RI 40/50x2,15 | Retaining ring, RI 40/50x2,15 |
| 7 | 740 45 13 00 | O-ring OR 69.2x5.7 | O-rinig OR 69.2x5.7 |
| 8 | 4165 89206 00 | Låsringshalvor för cyl Ø80 | Locking ring |
| 9 | 4165 93807 00 | Styrring, Ø40/44x10 | Guide ring, Ø40/44x10 |
| 10 | 4165 86405 02 | Ledlager, Ø30 | Spherical plain bearing, Ø30 |
| 11 | 735 31 40 11 | Spårring SgH 47 FZB | Circlip DIN 472 - 47 x 1.75 |
| 12 | 4165 89198 00 | Kolvtätning Ø80 | Seal |
| 13 | 740 44 12 00 | O-ring, OR 39,2x3.0 | O-ring, OR 39,2x3.0 |
| 14 | 4165 89203 00 | Stångtätning, Ø40/50x11 | Rod seal, Ø40/50x11 |
| 15 | 4165 93808 00 | Stödbricka, Ø40/50x2 | Support washer, Ø40/50x2 |
| 16 | 4 165 84423 00 | Stödring, 70/80 | Back-up ring, 70/80 |
| 17 | 4165 93806 00 | Styrning, Ø80/40 | Guide, Ø80/40 |
| 18 | 4165 89209 00 | Avstrykare, Ø40/50x7x10 | Wiper, Ø40/50x7x10 |
| 19 | 735 31 54 61 | Spårring AV 75 FZB | Retaining ring AV 75 FZB |
| 20 | 4165 30488 50 | Kolvstång kompl | Piston |
| - | 41659 38 10 00 | Packningssats | Set of seas |

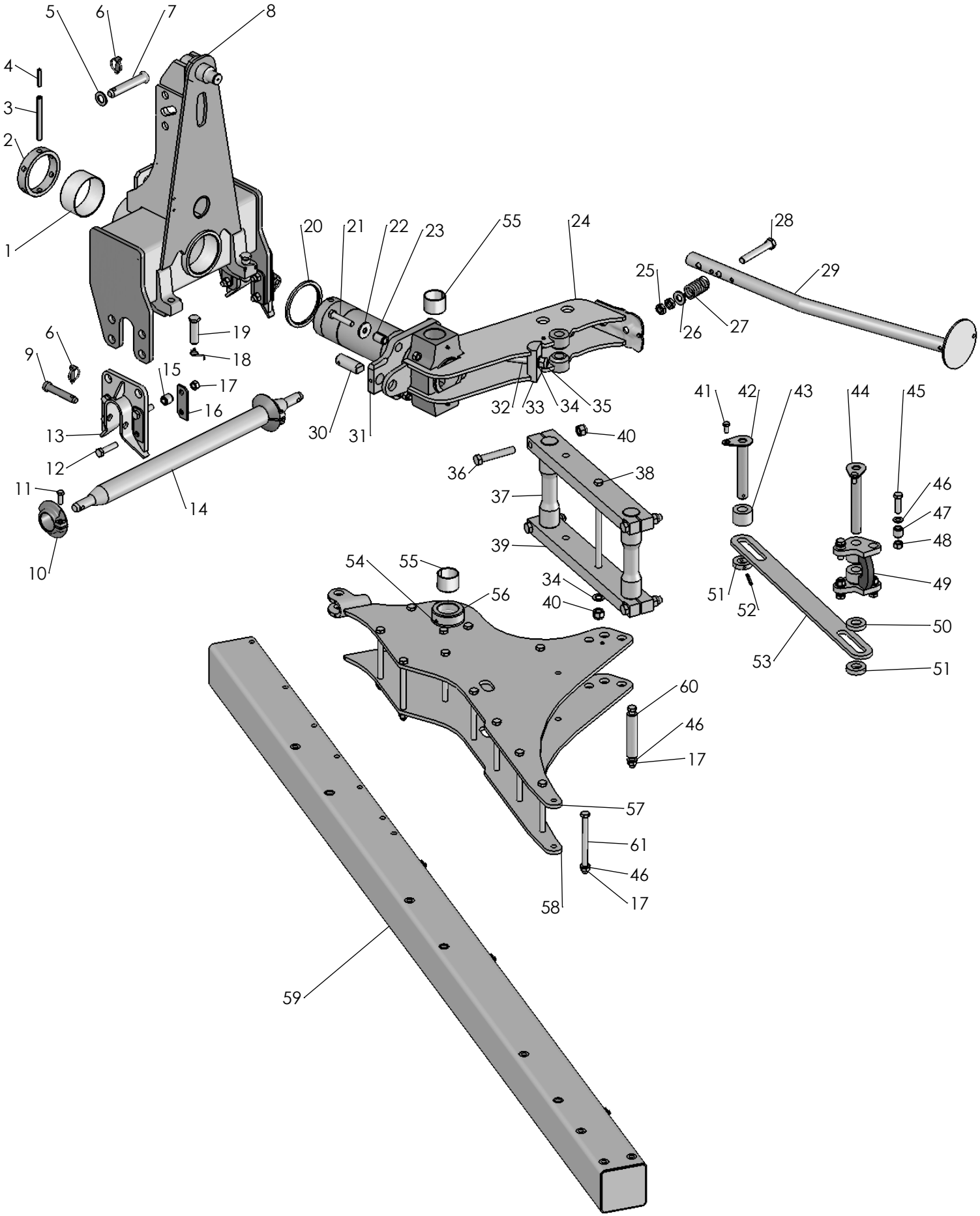
1
2
3
4
5
6
7
8
9
10
11
12
13
14
15
16
17
18
19
20
21
22
23
24
25
26
27
28
29
30
31
32
33
34
35
36
37
38
39
40
41
42
43
44
45
46
47
48
49
50
51
52
53
54
55
56
57
58
59
60
61

**1057**

| Pos nr/ Ref No | Detalj nr/ Part No | Benämning | Description |
|---|---|---|---|
| 1 | 4165 85300 00 | Glidlager, Ø125/130x60 | Slide bearing, Ø125/130x60 |
| 2 | 4165 86165 00 | Låsring | Lock ring |
| 3 | 721 45 80 10 | Fjädrande rörpinne FRP 16x150 FZB | Spring Pin ISO 8752 - 16 x 150 |
| 4 | 721 44 23 01 | Fjädrande rörpinne FRP 10x 60 FZB | Spring Pin ISO 8752 - 10 x 60 |
| 5 | 734 12 00 01 | Bricka BRB 26x 45 FZB | Washer 26x45-200 HV |
| 6 | 4165 85005 00 | Ringsprint, Ø11x34 | Linch pin, Ø11x34 |
| 7 | 4165 96463 00 | Toppstångstapp, Ø25,3x146 | Top link pin, Ø25,3x146 |
| 8 | 4165 26640 90 | Topp, CX HD | Headstock, CX HD |
| 9 | 4165 93005 00 | Tapp | Pivot pin |
| 10 | 4165 93368 50 | Infångarkon, ämne | Guidecone |
| 11 | 725 25 38 51 | Skruv M6S 12x 35- 8.8 FZB | Bolt ISO 4014 - M12 x 35 |
| 12 | 725 26 33 81 | Skruv M6S 16x 65-10.9 FZB | Bolt ISO 4014 M16x65 -10.9 |
| 13 | 4165 94550 90 | Bäraxellagring | Cross shaft bracket |
| 14 | 4165 86085 50 | Bäraxel kat. 2 | Cross shaft 2 |
| 15 | 165 86240 01 | Fjädrande rörpinne FRP 20x 28 | Spring pin DIN 1481 S Ø20x28 |
| 16 | 4165 94552 00 | Bricka | Washer |
| 17 | 4165 03604 05 | Mutter M6M 16-10 FZB | Nut DIN 934 M16-10 FZB |
| 18 | 4165 85779 00 | Friktionsfjäder | Friction ring |
| 19 | 4165 85693 00 | Skruv M24x80 N30, Kullrigt huvud | Bolt M24x80 N30, Special head 10.9 FZB |
| 20 | 4165 86166 00 | Bricka, Ø125,5/150x8 | Washer, Ø125,5/150x8 |
| 21 | 725 26 36 81 | Skruv M6S 16x 80-10.9 FZB | 725 26 36 81 |
| 22 | 4165 86433 00 | Bricka, Ø17/50x5 | Washer, Ø17/50x5 |
| 23 | 4165 86240 08 | Fjädrande rörpinne FRP 28x40 | DIN 1481 Ø28x40 |
| 24 | 4165 29366 90 | Medbringare FX | Turn-over arm |
| 25 | 731 43 26 01 | Mutter ML6M 20- 5 FZB | Nut M6M 20-8 FZB |
| 26 | 4165 94828 00 | Bricka, Ø21/43x5 | Washer, Ø21/43x5 |
| 27 | 4165 85882 00 | Tryckfjäder, Ø6, Dy 43, L=70 | Compression spring, Ø6, Dy 43, L=70 |
| 28 | 725 26 90 51 | Skruv M6S 20x130- 8.8 FZB | Bolt ISO 4014 - M20 x 130 |
| 29 | 4165 95527 90 | Stödben | Stand |
| 30 | 4165 90034 00 | Cylindertapp | Pin |
| 31 | 4165 98387 90 | Vridplatta | Plate |
| 32 | 725 27 05 81 | Skruv M6S 20x320-10.9 FZB | Bolt ISO-4014 M20x320 10.9 FZB |
| 33 | 4165 29551 50 | Förspänningsaxel | Axle |
| 34 | 734 11 92 01 | Bricka BRB 21x 37 FZB | Washer ISO 7089-M20-200 HV |
| 35 | 732 21 26 51 | Mutter M6M 20- 8 NF FZB | Nut ISO 7040-M20 |
| 36 | 725 26 88 81 | Skruv M6S 20x120-10.9 FZB | Bolt ISO 20x120-10.9 |
| 37 | 4165 94320 50 | Ledaxel | Link arm |
| 38 | 725 26 63 81 | Skruv M6S 16x360-10.9 FZB | Bolt ISO 16x360-10.9 FZB |
| 39 | 4165 93401 90 | Länk | Link |
| 40 | 165 03650 07 | Mutter M6M 20 NF-10 FZB | Nut ISO-7040-M20-10 |
| 41 | 725 25 34 51 | Skruv M6S 12x 25- 8.8 FZB | Bolt ISO 4014 - M12 x 25 |
| 42 | 4165 30230 00 | Låstapp, Ø30X195 | Blocking axle |
| 43 | 4165 30229 00 | Distans | Sleeve |
| 44 | 4165 30227 00 | Låstapp, Ø30x222 | Blocking axle |
| 45 | 725 26 31 51 | Skruv M6S 16x 55- 8.8 FZB | Bolt ISO 4014 - M16 x 55-8.8 FZB |
| 46 | 734 11 86 01 | Bricka BRB 17x30 FZB | Washer ISO 7089 - 16 |
| 47 | 4165 86240 01 | Fjädrande rörpinne FRP 28x28 | Spring pin DIN 1481 28x28 |
| 48 | 731 23 24 01 | Mutter M6M 16- 8 FZB | Nut ISO - 4032 - M8-8 FZB |
| 49 | 4165 26360 90 | Cylinderhållare | Bracket |
| 50 | 4165 30226 00 | Bricka, Ø30,5/Ø59x13 | Washer, Ø30,5/Ø59x13 |
| 51 | 4165 27050 00 | Låsring Ø30,5 | Lock ring |
| 52 | 721 43 84 01 | Fjädrande rörpinne FRP 8x 60 FZB | Spring pin ISO 8752 8x60 FZB |
| 53 | 4165 30502 50 | Säkerhetsjärn | Safety plate |
| 54 | 738 88 20 03 | Smörjnippel, AM 8x1,25 FZB | Grease nipple, AM 8x1,25 FZB |
| 55 | 4165 94321 00 | Glidlager, Ø60/65x50 | Slide bearing, Ø60/65x50 |
| 56 | 4165 98389 90 | Länkhylsa, Ø100 | Sleeve, Ø100 |
| 57 | 4165 30218 90 | Länkplåt Övre | Cross bace upper |
| 58 | 4165 30221 90 | Länkplåt Undre | Cross bace under |
| 59 | 4165 25991 91/92 | Ramrör Frontplog 2100/3100 | Mainfram 2100/3100 |
| 60 | 4165 97975 00 | Hylsa, Ø16/32x149 | Sleeve, Ø16/32x149 |
| 61 | 725 26 53 81 | Skruv M6S 16x200-10.9 FZB | Bolt |

## Djupindikeringssats
## Kit for depthindicator

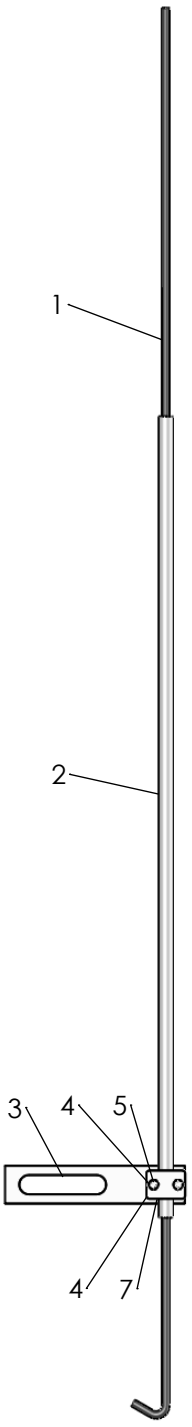


## Mekanisk justering av 1:a tiltan
## Mechanical front furrow widht adjustment

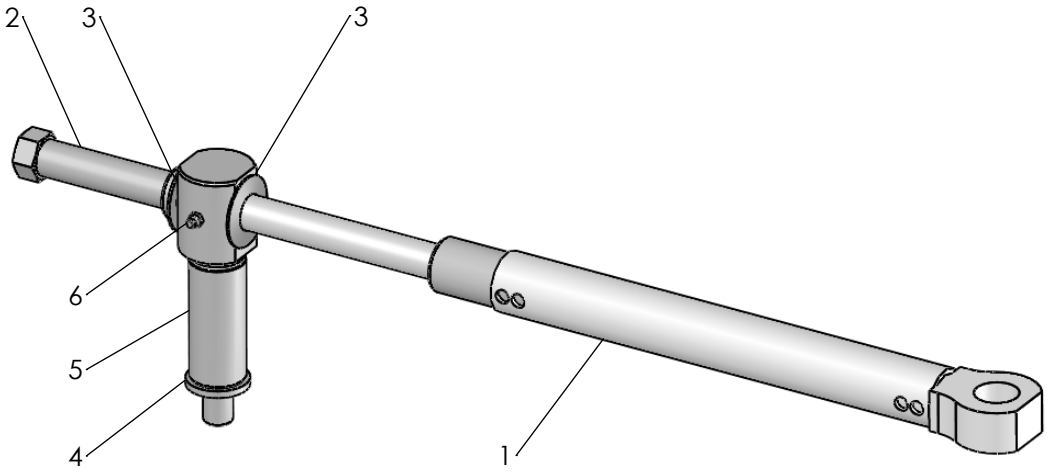


1070

| Pos nr/ Ref No | Detalj nr/ Part No: 41652556200 | Benämning: Mekanisk justering av 1:a tiltan | Description: Mechanical front furrow widht adjustment |
|---|---|---|---|
| 1 | 4165 26278 00 | Justerhylsa | Adjusting sleeve |
| 2 | 4165 93251 00 | Spindel | Spindle |
| 3 | 4165 98496 00 | Tallriksfjäder TF 50x25.4x1.5 | Belleville spring |
| 4 | 4165 94828 00 | Bricka, Ø21/43x5 | Washer, Ø21/43x5 |
| 5 | 4165 25561 00 | Ledtapp för frontplog | Pivot pin |
| 6 | 738 88 20 03 | Smörjnippel, AM 8x1,25 FZB | Grease nipple, AM 8x1,25 FZB |

| Pos nr/ Ref No | Detalj nr/ Part No: 41652609500 | Benämning: Djupindikeringssats | Description kit for dephtindicator |
|---|---|---|---|
| 1 | 4165 26093 00 | Mätsticka | Indicator |
| 2 | 4165 26096 00 | Rör | Pipe |
| 3 | 4165 26097 00 | Plåt | Plate |
| 4 | 725 23 80 51 | Skruv M6S 6x 50- 8.8 FZB | Bolt ISO 4014 - M6 x 50 |
| 5 | 731 23 16 01 | Mutter M6M 6- 8 FZB | Nut ISO - 4032 - M6-8 FZB |
| 6 | 4 165 91204 00 | Klammerpar, Ø15 | Tube clamps, Ø15 |
| 7 | 4 165 91205 00 | Täckplatta 26 | Covering plate 26 |

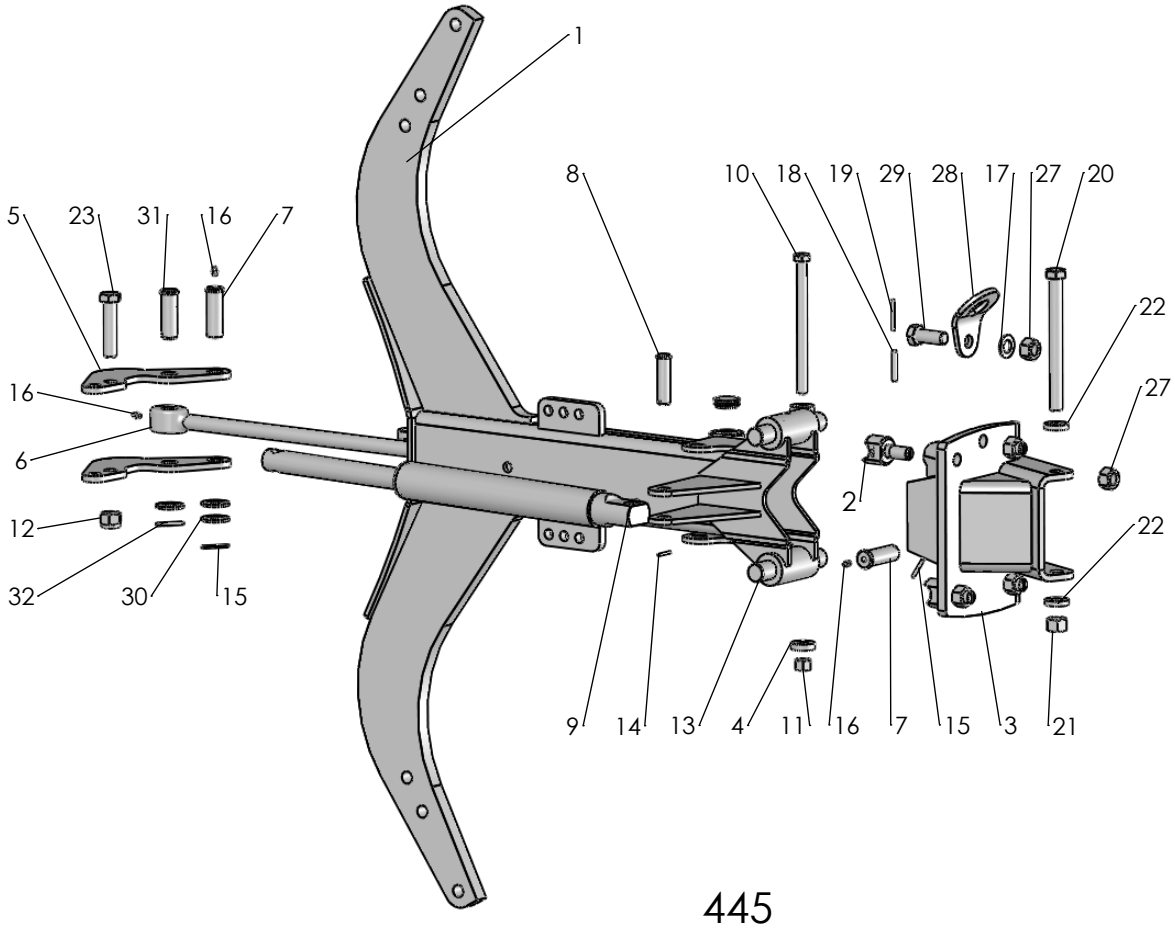
1
8
10
18
19
29
28
17
27
20
5
23
31
16
7
22
16
27
6
2
12
22
32
30
15
9
14
13
4
11
16
7
15
3
21

445

9

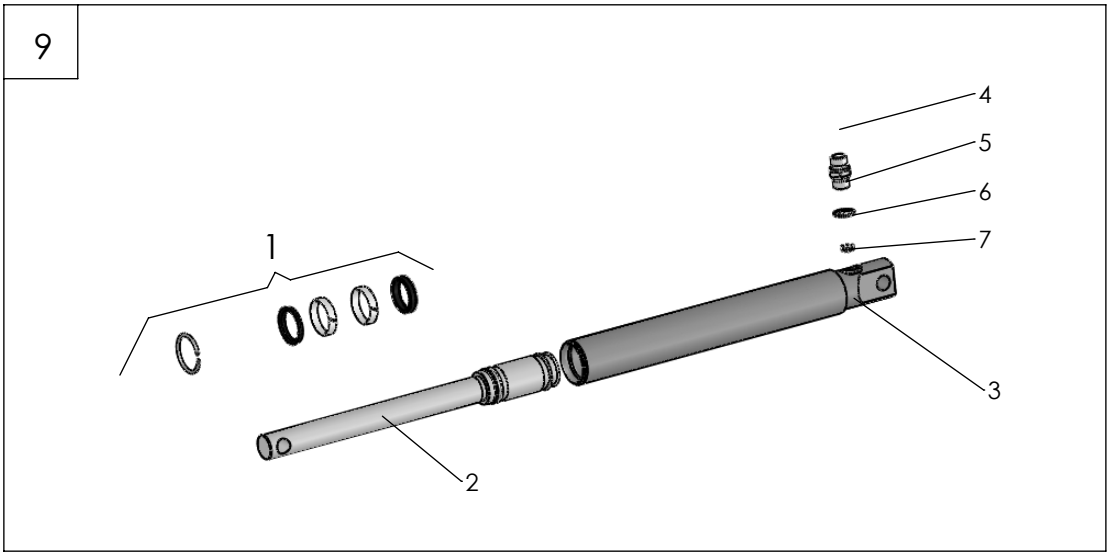
4
5
6
7
1
3
2

6

| Pos nr<br>Pos.Nr<br>Ref.No<br>Fig.Nº. | Detalj nr<br>Best.Nr<br>Part No<br>Code Nº. | | Benämning | Bezeichnung | Description | Description |
|---|---|---|---|---|---|---|
| **445** | | **H** | **ÅSHUS** | **GRINDELGEHÄUSE** | **BEAM HOUSING** | **SUPPORT D'AGE** |
| 1 | 1658 60 43 90 | 730 | Ås | Grindel | Beam | Age |
| | 1659 61 12 90 | 800 | Ås | Grindel | Beam | Age |
| 2 | 1658 60 80 00 | | Säte | Sitz | Seat | Siége |
| 3 | 1659 95 00 90 | | Åsfäste | Grindelgehäuse | Beam housing | Support d'age |
| 4 | 1658 58 84 00 | | Bricka | Scheibe | Washer | Rondelle |
| 5 | 1658 60 56 90 | | Hävarm | Hebelarm | Walking beam | Bras de levier |
| | 1652 15 55 90 | | Hävarm | Hebelarm | Walking beam | Bras de levier |
| 6 | 1652 59 02 50 | | Dragstång | Zugstange | Draw rod | Barre f d'attelage |
| 7 | 1658 60 79 00 | | Tapp | Zylinderbolzen | Pivot pin | Axe |
| 8 | 1657 23 99 01 | ø20 | Cylindrisk bult | Bolzen | Pivot pin | Cheville |
| 9 | 1652 15 50 50 | | Hydr cylinder kompl | Hydr. Zylinder kompl. | Hydr. Cylinder compl. | Vérin hydraulique cpl. |
| 10 | 1659 08 56 00 | M6S 16x215 | Skruv | Schraube | Bolt | Vis |
| 11 | 1650 36 07 05 | M6M 16 12 | Mutter | Mutter | Nut | Ecrou |
| 12 | 1650 36 50 07 | Locking 20 | Mutter | Mutter | Nut | Ecrou |
| 13 | 1658 60 44 00 | | Tapp | Zylinderbolzen | Pivot pin | Axe |
| 14 | 721 42 62 01 | FRP 4x32 | Rörpinne | Hohlstift | Tension pin | Goupille cannelée |
| 15 | 721 43 15 01 | FRP 5x36 | Rörpinne | Hohlstift | Tension pin | Goupille cannelée |
| 16 | 738 88 20 03 | AM 8x1,25 | Smörjnippel | Schmiernippel | Grease nipple | Graisseur |
| 17 | 734 11 92 01 | BRB 21x37 | Bricka | Scheibe | Washer | Rondelle |
| 18 | 721 43 85 01 | FRP 8x50 | Rörpinne | Hohlstift | Tension pin | Goupille cannelée |
| 19 | 721 43 18 01 | FRP 5x50 | Rörpinne | Hohlstift | Tension pin | Goupille cannelée |
| 20 | 1659 05 31 00 | M6S 20x215 | Skruv | Schraube | Bolt | Vis |
| 21 | 1650 36 07 07 | M6M 20 12 | Mutter | Mutter | Nut | Ecrou |
| 22 | 1658 35 87 00 | | Bricka | Scheibe | Washer | Rondelle |
| 23 | 1659 19 45 00 | | Skruv | Schraube | Bolt | Vis |
| 24 | 1659 80 96 00 | 800 | Cylindrisk pinne | Zapfen | Pin | Axe |
| 27 | 731 23 26 51 | M6M 20 | Mutter | Mutter | Nut | Ecrou |
| 28 | 1652 22 43 60 | | Lyftfäste | Transporthebeösen | Lifting device | Crochet de manurention |
| 29 | 725 26 74 81 | M6S 20x50 | Skruv | Schraube | Bolt | Vis |
| 30 | 734 12 00 01 | BRB 26x45 | Bricka | Scheibe | Washer | Rondelle |
| 31 | 1652 59 14 00 | ø25 | Cylindrisk bult | Bolzen | Pivot pin | Cheville |
| 32 | 721 43 47 01 | FRP 6x40 | Rörpinne | Hohlstift | Tension pin | Goupille cannelée |
| **6** | | | **HYDRAULISK UTLÖSNINGS-CYLINDER** | **HYDRAULISCHER STEINSICHERUNG ZYLINDER** | **HYDRAULIC STONE TRIP CYLINDER** | **DISPOSITIF DE SECURITE HYDRAULIQUE** |
| | 1652 15 50 50 | ø50 | Hydr cylinder kompl utan Pos. nr 4 | Hydr.Zylinder kompl.ohne Pos.Nr 4 | Hydr.cylinder compl.without Ref.No.4 | Vérin cpl.sons Fig.No. 4 |
| 1 | 1658 62 56 00 | | Packningssats | Packungsgarnitur | Set of seals | Jeu de joints |
| 2 | 1652 38 02 50 | Inkl A,B,C | Kolvstång | Kolbenstange | Piston rod | Tige de piston |
| 3 | 1652 15 51 50 | | Cylinderrör | Zylindermantel | Cylinder jacket | Corps de cylindre |
| 4 | 1657 78 26 00 | | L-adapt | Winkel-Stück | Elbow union | Raccord angle |
| 5 | 1658 03 17 00 | | Adapt | Verbindungsstück | Union | Raccord |
| 6 | 1658 03 16 00 | | Tätningsbricka | Dishtungsscheibe | Sealing washer | Rondelle d'étanchéité |
| 7 | 1657 78 52 00 | | Ventilkägla | Ventilkegel | Valve conical | Soupape a cone |

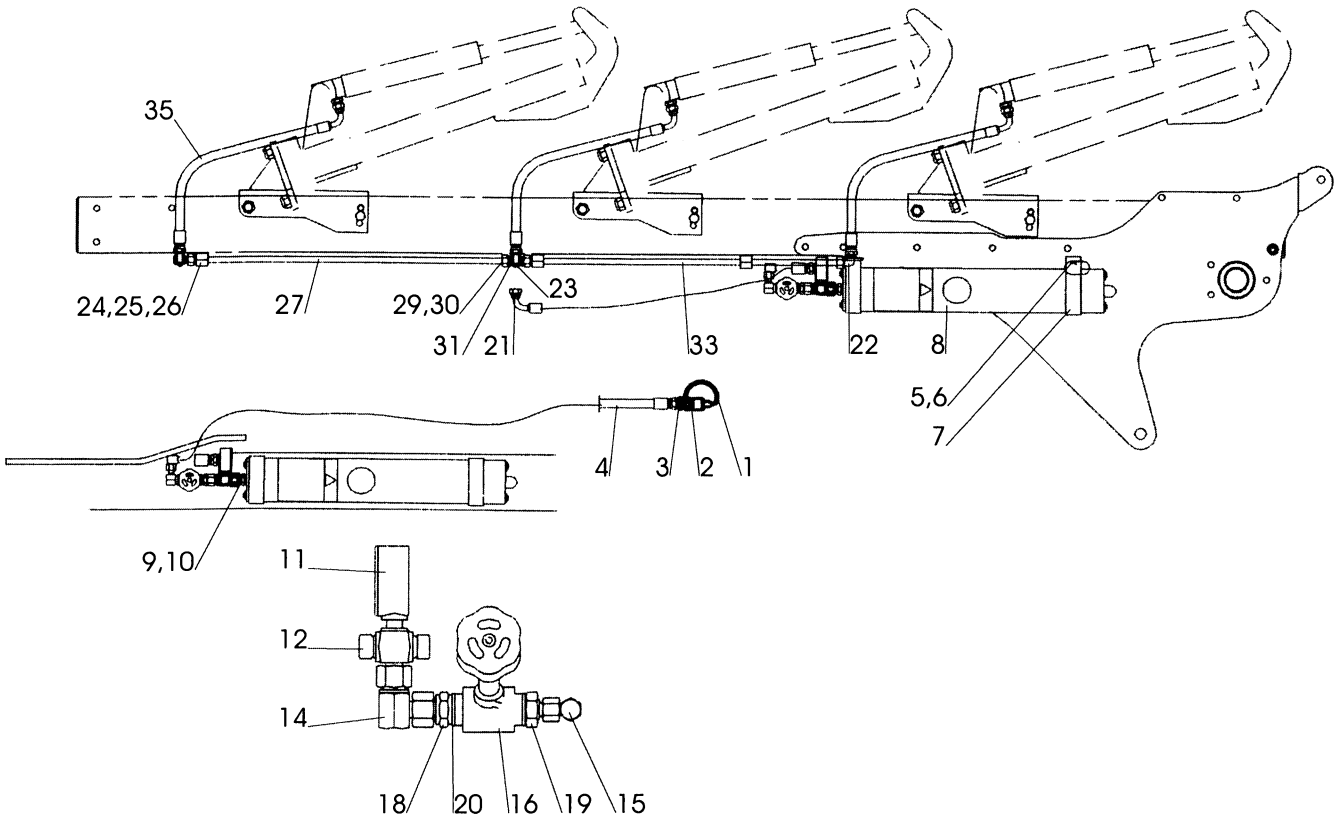
35
24,25,26
27
29,30
31
21
23
33
22
8
5,6
7
4
3
2
1
9,10
11
12
14
18
20
16
19
15

516

| Pos nr<br>Pos.Nr<br>Ref.No<br>Fig.Nº. | Detalj nr<br>Best.Nr<br>Part No<br>Code Nº. | | Benämning | Bezeichnung | Description | Description |
|---|---|---|---|---|---|---|
| **516** | | **FX** | **STENSÄKRINGS-HYDRAULIK** | **HYDRAUIISCHER STEINSICHERUNG** | **HYDRAULIC STONE TRIP** | **DISPOSITIF DE SECURITE HYDRAULIQUE** |
| 1 | 1657 83 83 00 | | Handelsskydd | Schutz | Guard | Protection |
| 2 | 1657 48 14 00 | | Handel | Schnellkupplung M | Quick coupling M | Raccord rapide M |
| 3 | 1657 72 31 00 | | Adapt | Verbindungsstück | Union | Raccord |
| 4 | 1651 42 91 00 | L=3100 | Slang | Schlauch | Hose | Tuyau flexible |
| 5 | 725 25 50 51 | M6S 12x90 | Skruv | Schraube | Bolt | Vis |
| 6 | 731 23 22 01 | M6M 12 | Mutter | Mutter | Nut | Ecrou |
| 7 | 1659 17 79 50 | | Band | Halter | Cord | Support |
| 8 | 1659 19 38 50 | | Ackumulator | Akkumulator | Accumulator | Accumulateur |
| 9 | 1659 21 38 00 | | Adapt | Verbindungsstück | Union | Raccord |
| 10 | 1658 03 16 00 | | Tätningsbricka | Dichtungsscheibe | Sealing washer | Rondelle d'étanchéité |
| 11 | 1658 07 50 00 | | Manometer | Druckmesser | Pressure gauge | Manometré |
| 12 | 1657 78 38 00 | | T-adapt | T-Stück | T-union | Raccord en T |
| 14 | 1657 78 26 00 | | L-adapt | Winkel-Stück | Elbow union | Raccord angle |
| 15 | 1658 56 36 00 | | L-adapt | Winkel-Stück | Elbow union | Raccord angle |
| 16 | 1657 30 57 00 | | Ventil | Ventil | Valve | Soupape |
| 18 | 1656 54 78 00 | | Adapt | Verbindungsstück | Union | Raccord |
| 19 | 1657 72 31 00 | | Adapt | Verbindungsstück | Union | Raccord |
| 20 | 1658 03 16 00 | | Tätningsbricka | Dichtungsscheibe | Sealing washer | Rondelle d'étanchéité |
| 21 | 1652 60 76 00 | L=920 | Slang | Schlauch | Hose | Tuyau flexible |
| 22 | 1657 57 47 00 | | L-adapt | Winkel-Stück | Elbow union | Raccord angle |
| 23 | 1658 30 50 00 | | L-adapt | Winkel-Stück | Elbow union | Raccord angle |
| 24 | 1659 12 04 00 | | Klammerhalvor | Klammer | Clamps | Colliers |
| 25 | 1659 12 05 00 | | Täckplatta | Deckblech | Covering plate | Plaque de recouvrement |
| 26 | 725 23 76 51 | M6S 6x35 | Skruv | Schraube | Bolt | Vis |
| 27 | 1659 19 36 00 | L=860 FX 2 | Rör | Rohr | Tube | Tuyau |
| | 1658 62 76 00 | L=960 FX 3 | Rör | Rohr | Tube | Tuyau |
| 29 | 1657 59 34 00 | | Mutter | Mutter | Nut | Ecrou |
| 30 | 1657 59 35 00 | | Skärring | Scneidring | Olive | Olive |
| 31 | 1657 57 46 00 | FX 2 | T-adapt | T-Stück | T-union | Raccord en T |
| | 1657 59 28 00 | FX 3 | X-adapt | X-Stück | X-union | Raccord en X |
| 33 | 1659 61 38 00 | FX 290,390 | Rör | Rohr | Tube | Tuyau |
| | 1652 30 48 00 | FX 2100,3100 | Rör | Rohr | Tube | Tuyau |
| 35 | 1659 88 51 00 | L=690 | Slang | Schlauch | Hose | Tuyau flexible |

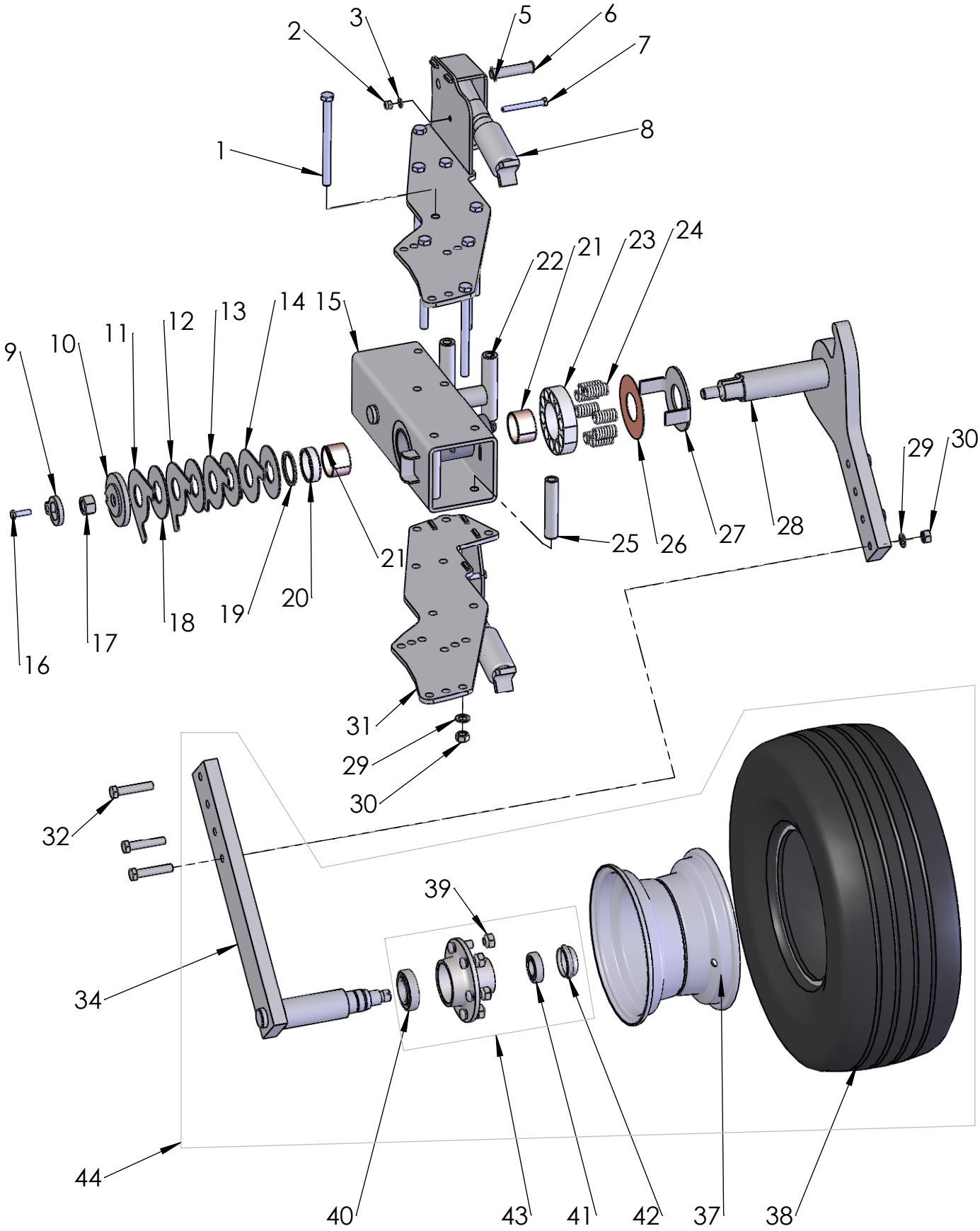
1
2
3
5
6
7
8
9
10
11
12
13
14
15
16
17
18
19
20
21
22
23
24
25
26
27
28
29
30
31
32
34
37
38
39
40
41
42
43
44

715

| Pos nr/ Ref No | Detalj nr/ Part No | Benämning | Description |
|---|---|---|---|
| 1 | 725 26 53 81 | Skruv M6S 16x200-10.9 FZB | Bolt M6S 16x200-10.9 FZB |
| 2 | 732 21 20 51 | Mutter M6M 10- 8 NF FZB | Nut M6M 10- 8 NF FZB |
| 3 | 734 11 73 01 | Bricka BRB 10,5x 20 FZB | Washer ISO 7089 - 10 FZB |
| 4 | 165 28730 90 | Hjulkonsol övre | Bracket |
| 5 | 721 42 62 01 | Fjädrande rörpinne FRP 4x 32 FZB | Spring Pin FRP 4x 32 FZB |
| 6 | 165 73224 01 | Cylindrisk bult, Ø20x88.5 | Pivot pin, Ø20x88.5 |
| 7 | 725 25 09 51 | Skruv M6S 10x 90- 8.8 FZB | Bolt M6S 10x 90-8.8 FZB |
| 8 | 165 24010 00 | Kläpp komplett | Catch |
| 9 | 165 22637 00 | Låsbricka | Washer |
| 10 | 165 22638 00 | Platta smst | Plate |
| 11 | 165 20622 00 | Stoppbricka steg nr 2 | Washer 1 |
| 12 | 165 20623 00 | Stoppbricka steg nr 3 | Washer 2 |
| 13 | 165 21250 00 | Stoppbricka steg nr 4 | Washer 3 |
| 14 | 4165 21251 00 | Stoppbricka steg nr 5 | Washer 4 |
| 15 | 165 28747 90 | Hjulkonsol för fronthjul | Bracket |
| 16 | 725 24 97 51 | Skruv M6S 10x 35- 8.8 FZB | Bolt M6S 10x 35- 8.8 FZB |
| 17 | 731 23 28 01 | Mutter M6M 24 8 FZB | Nut M6M 24 8 FZB |
| 18 | 165 20620 00 | Bromsskiva i stål | Washer |
| 19 | 165 23872 00 | QUAD-Ring | Ring |
| 20 | 4165 23871 00 | Hylsa, Ø60,25/70x20 | Sleeve, Ø60,25/70x20 |
| 21 | 165 85625 00 | Glidlager 60/65x40 | Bearing 60/65x40 |
| 22 | 4165 97975 00 | Hylsa, Ø16/32x149 | Sleeve Ø16/32 |
| 23 | 165 22651 00 | Fjäderhållare | Bracket |
| 24 | 165 21267 00 | Tryckfjäder | Spring |
| 25 | 4165 26150 00 | Hylsa, Ø27/17x132 | Sleeve Ø27/17x132 |
| 26 | 4165 22653 00 | Slitbricka, Ø61/135x1,5 | Wearing washer, Ø61/135x1,5 |
| 27 | 165 22652 00 | Bricka för kombihjul | Washer |
| 28 | 165 26373 90 | Hjularm för fronthjul, övre | Arm |
| 29 | 734 11 86 01 | Bricka BRB 17x30 FZB | Washer BRB 17x 30 FZB |
| 30 | 4165 03604 05 | Mutter M6M 16-10 FZB | Nut M6M 16-10 FZB |
| 31 | 165 28733 90 | Hjulkonsol nedre | Bracket |
| 32 | 725 26 36 81 | Skruv M6S 16x 80-10.9 FZB | Bolt M6S 16x 80- 10.9 FZB |
| 34 | 4165 32598 50 | Hjularm nedre | Wheelarm |
| 37 | 4165 32588 50 | Fälg | Rim |
| 38 | 4165 32596 00 | Däck 10,0/75-12/10 | Tyre 10,0/75-12/10 |
| 39 | 4165 32140 00 | Hjulmutter M16x1,5 FZB | Wheel nut M16x1,5 FZB |
| 40 | 4165 22422 00 | Koniskt rullager 30209 | Bearing 30209 |
| 41 | 4165 22421 00 | Koniskt rullager 30206 | Bearing 30206 |
| 42 | 4165 32608 00 | Navkapsel FAD, Ø62 | Hub FAD, Ø62 |
| 43 | 4165 32606 50 | Nav komplett med lager | Hub cmpl with bearings |
| 44 | 4165 33324 00 | Hjul med axel och nav | Wheel with axle and hub |

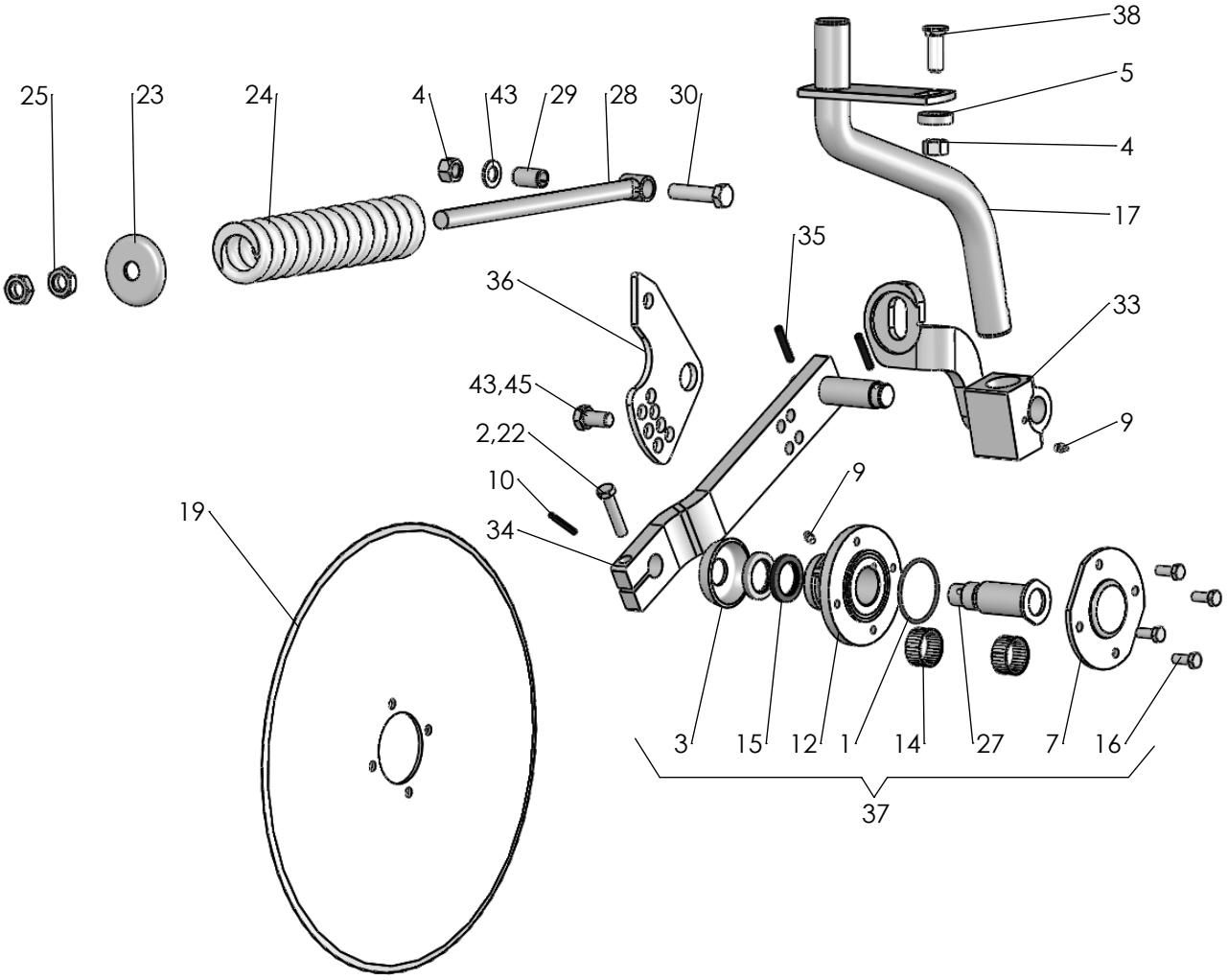
38
5
4
17
35
33
9
25
23
24
4
43
29
28
30
36
43,45
2,22
10
34
19
9
3
15
12
1
14
27
7
16
37

519

| Pos nr<br>Pos.Nr<br>Ref.No<br>Fig.Nº. | Detalj nr<br>Best.Nr<br>Part No<br>Code Nº. | | Benämning | Bezeichnung | Description | Description |
|---|---|---|---|---|---|---|
| **519** | | | **SKIVRIST** | **SCHEIBENSECH** | **DISC COULTER** | **COUTRE CIRCULAIRE** |
| | | R= | Höger | Rechts | Right | Droite |
| | | L= | Vänster | Links | Left | Gauche |
| | 41652 55 00 31 | ø450 R | Fjädrande skivrist med arm kompl | Gef. Scheibensech mit Arm kompl. kompl. | Spring-loaded disc coulter with arm compl. | Coutre circulaire a ressort avec bras cpl. |
| | 41652 55 00 32 | ø450 L | Fjädrande skivrist med arm kompl | Gef. Scheibensech mit Arm kompl. kompl. | Spring-loaded disc coulter with arm compl. | Coutre circulaire a ressort avec bras cpl. |
| | 41652 55 00 33 | ø500 R | Fjädrande skivrist med arm kompl | Gef. Scheibensech mit Arm kompl. kompl. | Spring-loaded disc coulter with arm compl. | Coutre circulaire a ressort avec bras cpl. |
| | 41652 55 00 34 | ø500 L | Fjädrande skivrist med arm kompl | Gef. Scheibensech mit Arm kompl. kompl. | Spring-loaded disc coulter with arm compl. | Coutre circulaire a ressort avec bras cpl. |
| | 41652 55 00 35 | ø500 R | Fjädrande skivrist ripplad med arm kompl | Gef. Scheibensech mit Arm kompl. Gewelltes | Spring-loaded disc coulter with arm compl. wavy edge | Coutre circulaire a ressort avec bras cpl. ondule |
| | 41652 55 00 36 | ø500 L | Fjädrande skivrist ripplad med arm kompl | Gef. Scheibensech mit Arm kompl. Gewelltes | Spring-loaded disc coulter with arm compl. wavy edge | Coutre circulaire a ressort avec bras cpl. ondule |
| 1 | 740 48 48 04 | Or 65,09x3,53 | O-ring | O-ring | O-ring | Joint thorique |
| 2 | 725 25 43 51 | M6S 12x55 | Skruv | Schraube | Bolt | Vis |
| 3 | 41658 09 59 00 | | Tätningsbricka | Dishtungsscheibe | Sealing washer | Rondelle |
| 4 | 731 23 24 01 | M6M 16 | Mutter | Mutter | Nut | Ecrou |
| 5 | 41658 58 84 00 | | Bricka | Scheibe | Washer | Rondelle |
| 7 | 41658 09 66 50 | | Lock | Deckel | Cover | Chapeau de |
| 9 | 738 88 20 03 | AM 8x1,25 | Smörjnippel | Schmiernippel | Grease nipple | Graisseur |
| 10 | 721 43 49 01 | FRP 6x50 | Rörpinne | Hohlstift | Tension pin | Goupille cannelÚe |
| 12 | 41658 09 67 50 | | Nav | Nabe | Hub | Moyeu |
| 14 | 41657 55 45 00 | 2 | Nållager | Nadellager | Needle bearing | Coussinet |
| 15 | 740 51 77 00 | A 35x52x7 | Tätningsring | Dichtungsring | Sealing ring | Bague d'usure |
| 16 | 725 24 93 51 | M6S 10x25 | Skruv | Schraube | Bolt | Vis |
| 17 | 41658 97 29 30 | R | Skaft fjädrande | Schaft | Shank | Etanþon de rasette |
| | 41658 97 30 30 | L | Skaft fjädrande | Schaft | Shank | Etanþon de rasette |
| 19 | 41657 25 47 00 | ø450 | Skivristklinga slät | Sechscheibe flach | Coulter disc plain | Disque de coutre plain |
| | 41658 06 62 00 | ø500 | Skivristklinga slät | Sechscheibe flach | Coulter disc plain | Disque de coutre plain |
| | 41658 06 63 00 | ø500 | Skivristklinga ripplad | Sechscheibe Gewellt | Coulter disc disc | Disque de coutre ondule |
| 22 | 734 11 78 01 | BRB 13x24 | Bricka | Scheibe | Washer | Plaquette |
| 23 | 41658 09 61 00 | | Bricka | Scheibe | Washer | Rondelle |
| 24 | 41658 15 29 00 | | Tryckfjäder | Feder | Spring | Ressort |
| 25 | 731 43 26 01 | M6LM 20 | Mutter | Mutter | Nut | Ecrou |
| 27 | 41658 10 76 00 | R | Axeltapp | Welle | Stube axle | Axe |
| | 41658 56 71 00 | L | Axeltapp | Welle | Stube axle | Axe |
| 28 | 41658 54 38 00 | | Dragstång | Zugstange | Draw rod | Barre d'attelage |
| 29 | 41658 62 40 09 | FRP 20x36 | Rörpinne | Hohlstift | Tension pin | Goupille cannelÚe |
| 30 | 725 26 33 81 | M6S 16x65 | Skruv | Schraube | Bolt | Vis |
| 33 | 41652 86 71 30 | R | Fjäderhållare | Haltearm | Bracket | Support fixation |
| | 41652 86 68 30 | L | Fjäderhållare | Haltearm | Bracket | Support fixation |
| 34 | 41658 66 39 30 | R | Arm | Arm | Arm | Bras |
| | 41658 66 42 30 | L | Arm | Arm | Arm | Bras |
| 35 | 721 43 84 01 | FRP 8x45 | Rörpinne | Hohlstift | Tension pin | Goupille cannelÚe |
| 36 | 41652 52 49 30 | | Hävarm | Hebelarm | Lever arm | Bras de levier |
| 37 | 41657 59 75 31 | R | Skivristnav kompl | Nabe kompl. | Hub compl. | Moyeu cpl. |
| | 41659 22 37 31 | L | Skivristnav kompl | Nabe kompl. | Hub compl. | Moyeu cpl. |
| 38 | 41650 36 02 33 | MFBK 16x40 | Skruv | Schraube | Bolt | Vis |
| 43 | 734 11 86 01 | BRB 17x30 | Bricka | Scheibe | Washer | Plaquette |
| 45 | 725 26 24 51 | M6S 16x30 | Skruv | Schraube | Bolt | Vis |

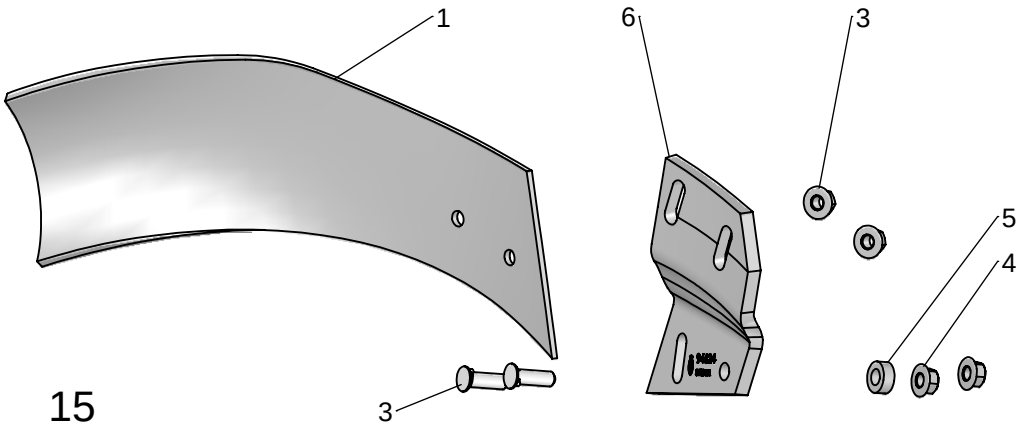


15

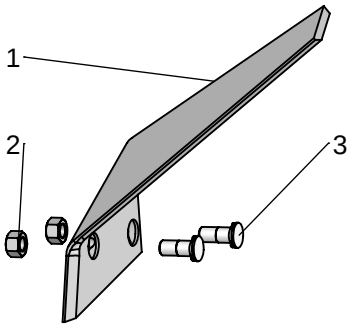


143

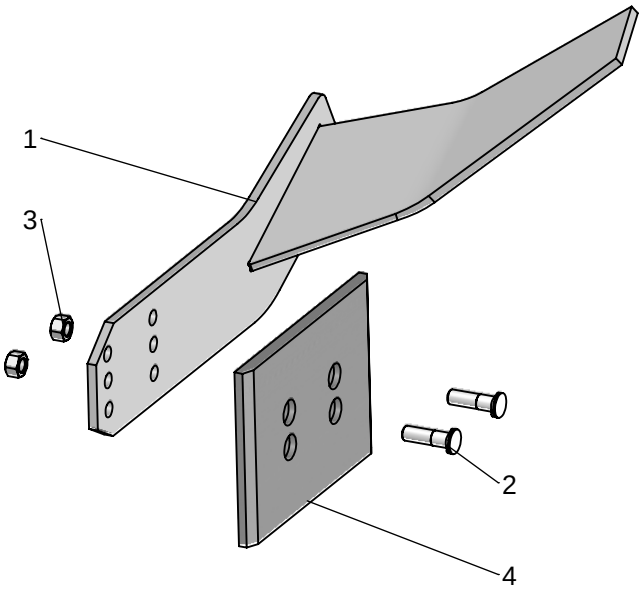


470

| Pos nr<br>Pos.Nr<br>Ref.No<br>Fig.Nº. | Detalj nr<br>Best.Nr<br>Part No<br>Code Nº. | | Benämning | Bezeichnung | Description | Description |
|---|---|---|---|---|---|---|
| **15** | | **XL,XU,XS UC** | **SKUMVINGE** | **EINLEGER-STREICHBLECH** | **COVERBOARD** | **DEFLECTEUR** |
| | | R= | Höger | Rechts | Right | Droite |
| | | L= | Vänster | Links | Left | Gauche |
| | 1659 62 69 50 | L,XL,UC | Skumvinge kompl | Einlegerstreich-blech kompl. | Coverboard compl. | DÚflecteur cpl. |
| | 1659 62 68 50 | R,XL,UC | Skumvinge kompl | Einlegerstreich-blech kompl. | Coverboard compl. | DÚflecteur cpl. |
| | 1652 13 38 50 | L,XU,XS | Skumvinge kompl | Einlegerstreich-blech kompl. | Coverboard compl. | DÚflecteur cpl. |
| | 1652 13 37 50 | R,XU,XS | Skumvinge kompl | Einlegerstreich-blech kompl. | Coverboard compl. | DÚflecteur cpl. |
| 1 | 1659 60 65 50 | L | Skumvinge | Streichblech | Coverboard | DÚflecteur |
| | 1659 60 64 50 | R | Skumvinge | Streichblech | Coverboard | DÚflecteur |
| 2 | 1650 36 02 22 | MFBK 12x35 | Skruv | Schraube | Bolt | Vis |
| 3 | 1650 36 02 23 | MFBK 12x40 | Skruv | Schraube | Bolt | Vis |
| 4 | 1658 94 89 00 | XL,UC | Hylsa | Hülse | Sleeve | Manchon |
| 5 | 1650 36 15 05 | M6M 12 | Flänsmutter | Bundmutter | Collar nut | Ecrou d'accouplem. |
| 6 | 1659 46 25 50 | L,XL,UC | Fäste | Halter | Bracket | Support |
| | 1659 46 24 50 | R,XL,UC | Fäste | Halter | Bracket | Support |
| | 1659 96 28 50 | L,XU,XS | Fäste | Halter | Bracket | Support |
| | 1659 96 27 50 | R,XU,XS | Fäste | Halter | Bracket | Support |
| **143** | | | **FÅR-BREDDARE** | **FURCHEN-MESSER** | **FURROW WIDENING KNIFE** | **COUTEAU POUR PNEUS LARGES** |
| | 1659 56 78 59 | R | Fårbreddare kompl | Furchen-Messer kompl. | Furrow knife compl. | Couteau cpl. |
| | 1659 56 79 59 | L | Fårbreddare kompl | Furchen-Messer kompl. | Furrow knife compl. | Couteau cpl. |
| 1 | 1659 56 78 50 | R | Fårbreddare | Furchen-Messer | Furrow knife | Couteau |
| | 1659 56 79 50 | L | Fårbreddare | Furchen-Messer | Furrow knife | Couteau |
| 2 | 1650 36 13 03 | M6M 12x1,25 | Mutter | Mutter | Nut | Ecrou |
| 3 | 1650 36 12 21 | MFBKF 12x29 | Skruv | Schraube | Bolt | Vis |
| **470** | | | **FÅR-BREDDARE** | **FURCHEN-MESSER** | **FURROW WIDENING KNIFE** | **COUTEAU POUR PNEUS LARGES** |
| | 1652 47 89 00 | R | Fårbreddare kompl | Furchen-Messer kompl. | Furrow knife compl. | Couteau cpl. |
| | 1652 47 90 00 | L | Fårbreddare kompl | Furchen-Messer kompl. | Furrow knife compl. | Couteau cpl. |
| 1 | 1652 38 68 50 | R | Fårbreddare | Furchen-Messer | Furrow knife | Couteau |
| | 1652 38 67 50 | L | Fårbreddare | Furchen-Messer | Furrow knife | Couteau |
| 2 | 1650 36 12 24 | MFBKF 12x45 | Skruv | Schraube | Bolt | Vis |
| 3 | 1650 36 13 03 | M6M 12x1,25 | Mutter | Mutter | Nut | Ecrou |
| 4 | 1659 42 89 00 | | Slitplatta | Verschleissplatte | Wearing plate | Plaque d'usure |

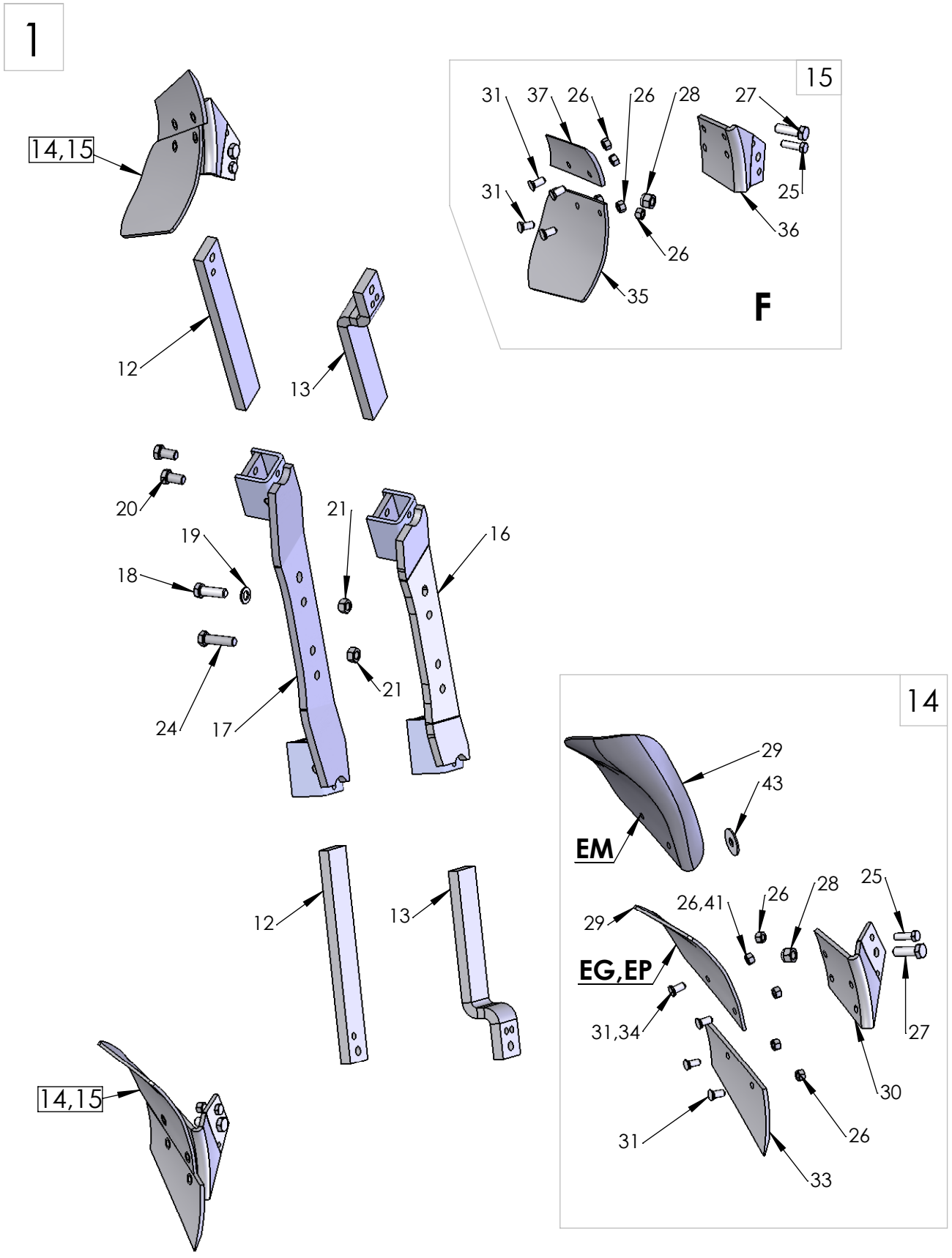
1
14,15
12
13
20
19
18
24
17
21
21
16
12
13
14,15
15
31
37
26
26
28
27
31
25
36
26
35
F
14
29
43
EM
26,41
26
28
25
29
EG,EP
31,34
27
30
31
26
33

1010

| Pos nr<br>Pos.Nr<br>Ref.No<br>Fig.Nº. | Detalj nr<br>Best.Nr<br>Part No<br>Code Nº. | | Benämning | Bezeichnung | Description | Description |
|---|---|---|---|---|---|---|
| **1010** | | | **SKUMRIST** | **VORSCHÄLER** | **SKIMMER** | **RASETTE** |
| From date 2013-08-01 | | | | | | |
| | | R= | Höger | Rechts | Right | Droite |
| | | L= | Vänster | Links | Left | Gauche |
| 1 | 4165 30316 50 | F | EP-rist | Vorschäler typ EP | Skimmer type EP | Rasette type EP |
| | 4165 30111 50 | F | EG-rist | Vorschäler typ EG | Skimmer type EG | Rasette type EG |
| | 4165 30317 50 | F | EM-rist | Vorschäler typ EM | Skimmer type EM | Rasette type EM |
| | 4165 30320 50 | F | F-rist | Vorschäler typ F | Skimmer type F | Rasette type F |
| | 4165 32902 50 | H 75 | EP-rist | Vorschäler typ EP | Skimmer type EP | Rasette type EP |
| | 4165 32901 50 | H 75 | EG-rist | Vorschäler typ EG | Skimmer type EG | Rasette type EG |
| | 4165 32903 50 | H 75 | EM-rist | Vorschäler typ EM | Skimmer type EM | Rasette type EM |
| | 4165 32980 50 | H 80 | EP-rist | Vorschäler typ EP | Skimmer type EP | Rasette type EP |
| | 4165 32977 50 | H 80 | EG-rist | Vorschäler typ EG | Skimmer type EG | Rasette type EG |
| | 4165 32981 50 | H 80 | EM-rist | Vorschäler typ EM | Skimmer type EM | Rasette type EM |
| 12 | 4165 29166 50 | | Skaft | Schaft | Shank | Etançon de rasette |
| 13 | 4165 32636 50 | | Skaft bockat | Schaft gebogen | Shank bent | Etançon de rasette courbé |
| 14 | 4165 99049 50 | R | EP-rist | Vorschäler typ EP | Skimmer type EP | Rasette type EP |
| | 4165 99050 50 | L | EP-rist | Vorschäler typ EP | Skimmer type EP | Rasette type EP |
| | 4165 98260 50 | R | EG-rist | Vorschäler typ EG | Skimmer type EG | Rasette type EG |
| | 4165 98261 50 | L | EG-rist | Vorschäler typ EG | Skimmer type EG | Rasette type EG |
| | 4165 24423 50 | R | EM-rist | Vorschäler typ EM | Skimmer type EM | Rasette type EM |
| | 4165 24424 50 | L | EM-rist | Vorschäler typ EM | Skimmer type EM | Rasette type EM |
| 15 | 4165 99033 50 | R | F-rist | Vorschäler typ F | Skimmer type F | Rasette type F |
| | 4165 99034 50 | L | F-rist | Vorschäler typ F | Skimmer type F | Rasette type F |
| 16 | 4165 32571 50 | | Fäste kort | Halter klein | Bracket short | Support court |
| 17 | 4165 29174 50 | | Fäste | Halter | Bracket | Support |
| 18 | 4165 20377 00 | M6S 16x50 | Skruv | Schraube | Bolt | Vis |
| 19 | 4734 11 86 01 | BRB 17x30 | Bricka | Scheibe | Washer | Plaquette |
| 20 | 4165 91634 00 | | Justerskruv | Einstellschraube | Adjusting screw | Vis reglage |
| 21 | 4165 03604 05 | M6M 16 | Mutter | Mutter | Nut | Ecrou |
| 24 | 4725 26 32 81 | M6S 16x60 | Skruv | Schraube | Bolt | Vis |
| 25 | 4165 20376 00 | M6S 12x40 | Skruv | Schraube | Bolt | Vis |
| 26 | 4731 23 22 01 | M6M 12 | Mutter | Mutter | Nut | Ecrou |
| 27 | 4165 20377 00 | M6S 16x50 | Skruv | Schraube | Bolt | Vis |
| 28 | 4732 21 24 51 | M16 | Låsmutter | Nyloc-Mutter | Lock nut | Ecrou freiné |
| 29 | 4165 91803 09 | R | EG-vändskiva | EG-Streicblech | EG-Mouldboard | EG-versoir de raset. |
| | 4165 91804 09 | L | EG-vändskiva | EG-Streicblech | EG-Mouldboard | EG-versoir de raset. |
| | 4165 92085 09 | R | EP-vändskiva | EP-Streichblech | EP-Mouldbord | EP-versoir de raset. |
| | 4165 92086 09 | L | EP-vändskiva | EP-Streichblech | EP-Mouldbord | EP-versoir de raset. |
| | 4165 24421 09 | R | EM-vändskiva | EM-Streichblech | EM-Mouldbord | EM-versoir de raset. |
| | 4165 24422 09 | L | EM-vändskiva | EM-Streichblech | EM-Mouldbord | EM-versoir de raset. |
| 30 | 4165 98258 50 | R | EG-EP-EM-ställ | EG-EP-EM-Scharhalter | EG-EP-EM-frog | EG-EP-EM-Sep |
| | 4165 98259 50 | L | EG-EP-EM-ställ | EG-EP-EM-Scharhalter | EG-EP-EM-frog | EG-EP-EM-Sep |
| 31 | 4165 03602 21 | MFBK 12x28 | Skruv | Schraube | Bolt | Vis |
| 33 | 4165 91801 09 | R | EG-EP-EM-skär | EG-EP-EM-Schar | EG-EP-EM-share | EG-EP-EM-vannas |
| | 4165 91802 09 | L | EG-EP-EM-skär | EG-EP-EM-Schar | EG-EP-EM-share | EG-EP-EM-vannas |
| 34 | 4725 65 40 01 | MF6S 12x40 | Skruv EP | Schraube EP | Bolt EP | Vis EP |
| 35 | 4165 93062 00 | R | F-vändskiva | F-Streichblech | F-mouldboard | F-versoir de raset. |
| | 4165 93061 00 | L | F-vändskiva | F-Streichblech | F-mouldboard | F-versoir de raset. |
| 36 | 4165 99031 50 | R | F-ställ | F-Rumpf | F-frog | F-sep |
| | 4165 99032 50 | L | F-ställ | F-Rumpf | F-frog | F-sep |
| 37 | 4165 93055 09 | R | F-skär | F-Schar | F-shar | F-soc de raset. |
| | 4165 93054 09 | L | F-skär | F-Schar | F-shar | F-soc de raset. |
| 40 | 4165 20096 00 | | Låsbricka | Sicherungsscheibe | Lock washer | Rondelle d'arrêt |
| 41 | 4732 21 22 51 | M6M 12 | Låsmutter EP | Nyloc-Mutter EP | Lock nut EP | Ecrou freiné EP |
| 42 | 4734 11 86 01 | BRB 17x30 | Bricka | Scheibe | Washer | Plaquette |
| 43 | 4165 25921 00 | | Gummibricka | Gummischeibe | Rubberwasher | Rondelle en caoutchouc |

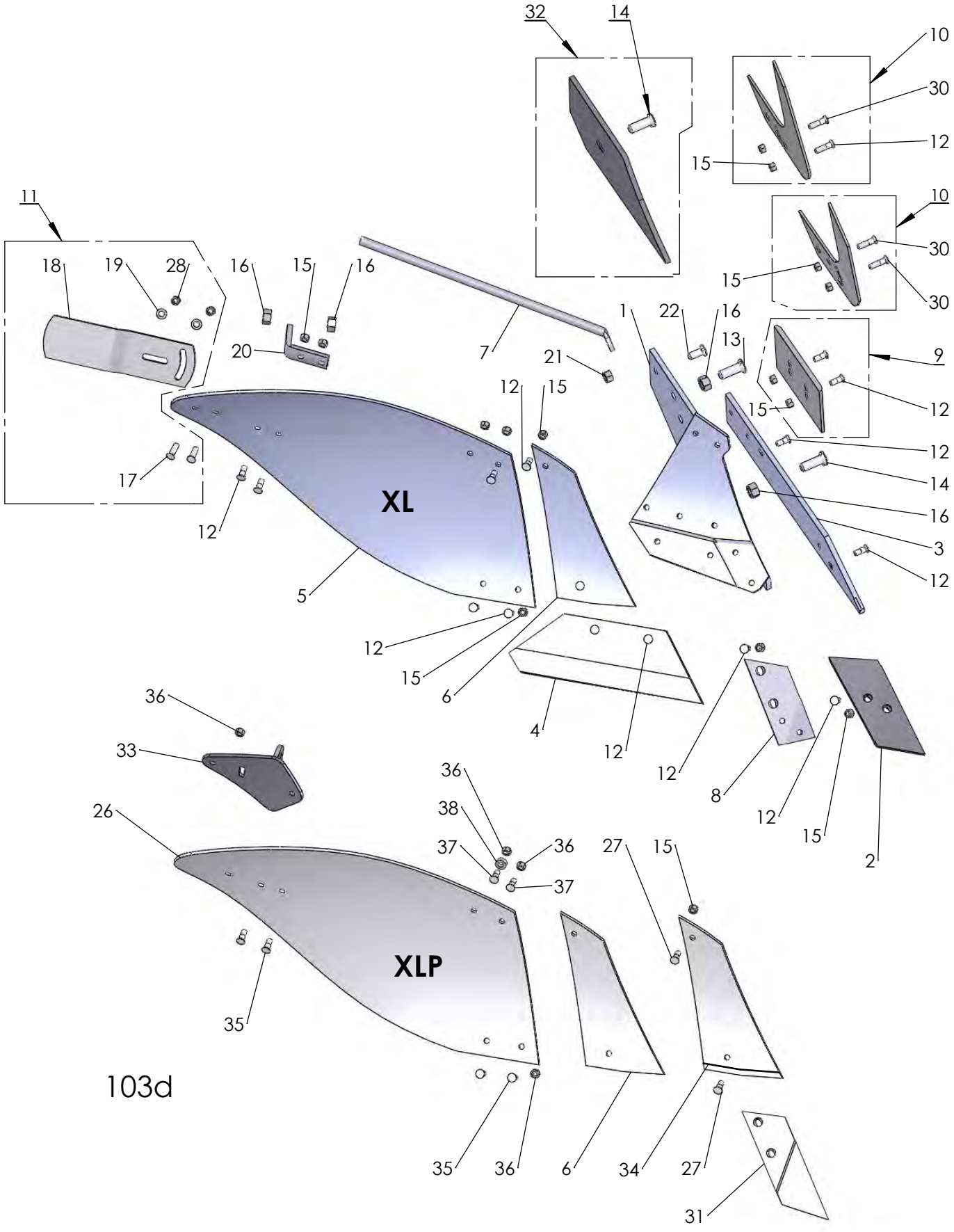
32
14
10
30
12
15
10
30
15
30
11
18
19
28
16
15
16
20
7
21
1
22
16
13
9
12
15
12
15
12
14
16
3
12
17
12
XL
5
12
15
6
4
12
12
8
12
15
2
36
33
26
36
38
37
36
37
27
15
XLP
35
35
36
6
34
27
31

103d

| Pos nr<br>Pos.Nr<br>Ref.No<br>Fig.Nº. | Detalj nr<br>Best.Nr<br>Part No<br>Code Nº. | | Benämning | Bezeichnung | Description | Description |
|---|---|---|---|---|---|---|
| **103d** | | **XL,XLP** | **PLOGKROPP** | **PFLUGKÖRPER** | **PLOUGH** | **CORPS DE** |
| | | R= | Höger | Rechts | Right | Droite |
| | | L= | Vänster | Links | Left | Gauche |
| 1 | 1659 46 17 90 | L | Ställ | Rumpf | Frog | Sep |
| | 1659 46 16 90 | R | Ställ | Rumpf | Frog | Sep |
| 2 | 1659 46 09 09 | L | Spets | Scharspitze | Share point | Pointe |
| | 1659 46 08 09 | R | Spets | Scharspitze | Share point | Pointe |
| 3 | 1659 46 05 09 | L | Landsida | Landseite | Landside | Contre-sep |
| | 1659 46 04 09 | R | Landsida | Landseite | Landside | Contre-sep |
| 4 | 1659 45 99 09 | 14" L | Skär | Schar | Share | Soc |
| | 1659 45 98 09 | 14" R | Skär | Schar | Share | Soc |
| | 1659 46 01 09 | 16" L | Skär | Schar | Share | Soc |
| | 1659 46 00 09 | 16" R | Skär | Schar | Share | Soc |
| | 1659 46 03 09 | 18" L | Skär | Schar | Share | Soc |
| | 1659 46 02 09 | 18" R | Skär | Schar | Share | Soc |
| 5 | 1659 45 95 99 | XL/L | Vändskiva | Streichblech | Mouldboard | Versoir |
| | 1659 45 94 99 | XL/R | Vändskiva | Streichblech | Mouldboard | Versoir |
| 6 | 1659 45 97 09 | L | Vändskivebröst | Streichblechbrust | Mouldboard shin | Epaulement de versoir |
| | 1659 45 96 09 | R | Vändskivebröst | Streichblechbrust | Mouldboard shin | Epaulement de versoir |
| 7 | 1659 46 14 90 | | Stötta | Haltestrebe | Support stay | Renfort de versoir |
| 8 | 1659 46 13 09 | L | Fäste | Halter | Bracket plate | Plaque de serrage |
| | 1659 46 12 09 | R | Fäste | Halter | Bracket plate | Plaque de serrage |
| 9 | 1659 42 89 09 | | Slitplatta kompl. | Verschleissplatte kom | Wearing plate cmpl | Plaque d'usure cpl |
| 10 | 1659 46 23 09 | L | Knivrist | Anlagensech | Fin coulter | Coutre aileron |
| | 1659 46 22 09 | R | Knivrist | Anlagensech | Fin coulter | Coutre aileron |
| 10 | 1652 94 39 09 | L | Knivrist QR | Anlagensech QR | Fin coulter QR | Coutre aileron QR |
| | 1652 94 38 09 | R | Knivrist QR | Anlagensech QR | Fin coulter QR | Coutre aileron QR |
| 11 | 1658 54 62 50 | XL/L | Tiltvinge kompl | Streichschiene kompl. | Mouldboard extens. compl. | Rallonge de versoir cpl. |
| | 1658 54 61 50 | XL/R | Tiltvinge kompl | Streichschiene kompl. | Mouldboard extens. compl. | Rallonge de versoir cpl. |
| 12 | 1650 36 12 21 | MFBKF 12x32 | Skruv | Schraube | Bolt | Vis |
| 13 | 1650 36 02 57 | MFBK 20x60 | Skruv | Schraube | Bolt | Vis |
| 14 | 1650 36 02 58 | MFBK 20x75 | Skruv | Schraube | Bolt | Vis |
| 15 | 1650 36 13 03 | M6M 12x1,25 | Mutter | Mutter | Nut | Ecrou |
| 16 | 1650 36 04 07 | M6M 20 | Mutter | Mutter | Nut | Ecrou |
| 17 | 1650 36 02 23 | MFBK 12x40 | Skruv | Schraube | Bolt | Vis |
| 18 | 1658 05 59 50 | XL/L | Tiltvinge | Streichschiene | Mouldboard extens. | Rallonge de versoir |
| | 1657 49 22 50 | XL/R | Tiltvinge | Streichschiene | Mouldboard extens. | Rallonge de versoir |
| 19 | 734 11 78 01 | BRB 13x24 | Bricka | Scheibe | Washer | Rondelle |
| 20 | 1659 46 15 90 | | Stöttvinkel | Halter | Bracket | Support |
| 21 | 731 23 24 01 | M6M 16 | Mutter | Mutter | Nut | Ecrou |
| 22 | 1650 36 02 33 | MFBK 16x40 | Skruv | Schraube | Bolt | Vis |
| 26 | 1652 48 04 09 | XLP/L | Plastvändskiva | Streichblech Kunststoff | Mouldboard plastic | Versoir plastique |
| | 1652 48 03 09 | XLP/R | Plastvändskiva | Streichblech Kunststoff | Mouldboard plastic | Versoir plastique |
| 27 | 1650 36 02 22 | MFBK 12x35 | Skruv | Schraube | Bolt | Vis |
| 28 | 731 23 22 51 | M6M 12 | Mutter | Mutter | Nut | Ecrou |
| 29 | 1650 36 02 24 | MFBK 12x45 | Skruv | Schraube | Bolt | Vis |
| 30 | 1650 36 12 24 | MFBKF 12x45 | Skruv | Schraube | Bolt | Vis |
| 31 | 1659 62 72 09 | R | Spets special | Scharspitze spezial | Share point special | Pointe special |
| | 1659 62 73 09 | L | Spets special | Scharspitze spezial | Share point special | Pointe special |
| 32 | 1652 39 24 09 | R | Täckplåt | Deckblech | Covering plate | Plaque de recouvrem. |
| | 1652 39 25 09 | L | Täckplåt | Deckblech | Covering plate | Plaque de recouvrem. |
| 33 | 1652 43 67 50 | R | Stöttvinkel | Halter | Bracket | Support |
| | 1652 47 97 50 | L | Stöttvinkel | Halter | Bracket | Support |
| 34 | 1652 48 01 50 | R | Vändskivebröst fas | Streichblechbrust | Mouldboard shin | Epaulement de |
| | 1652 48 02 50 | L | Vändskivebröst fas | Streichblechbrust | Mouldboard shin | Epaulement de |
| 35 | 725 65 40 01 | MF6S 12x40 | Skruv XLP | Schraube XLP | Bolt XLP | Vis XLP |
| 36 | 732 21 22 51 | M6M 12 | Låsmutter XLP | Nyloc-Mutter XLP | Lock nut XLP | Ecrou freiné XLP |
| 37 | 725 65 42 01 | MF6S 12x50 | Skruv XLP | Schraube XLP | Bolt XLP | Vis XLP |
| 38 | 1658 94 89 00 | 13/25x10 | Bricka | Scheibe | Washer | Rondelle |

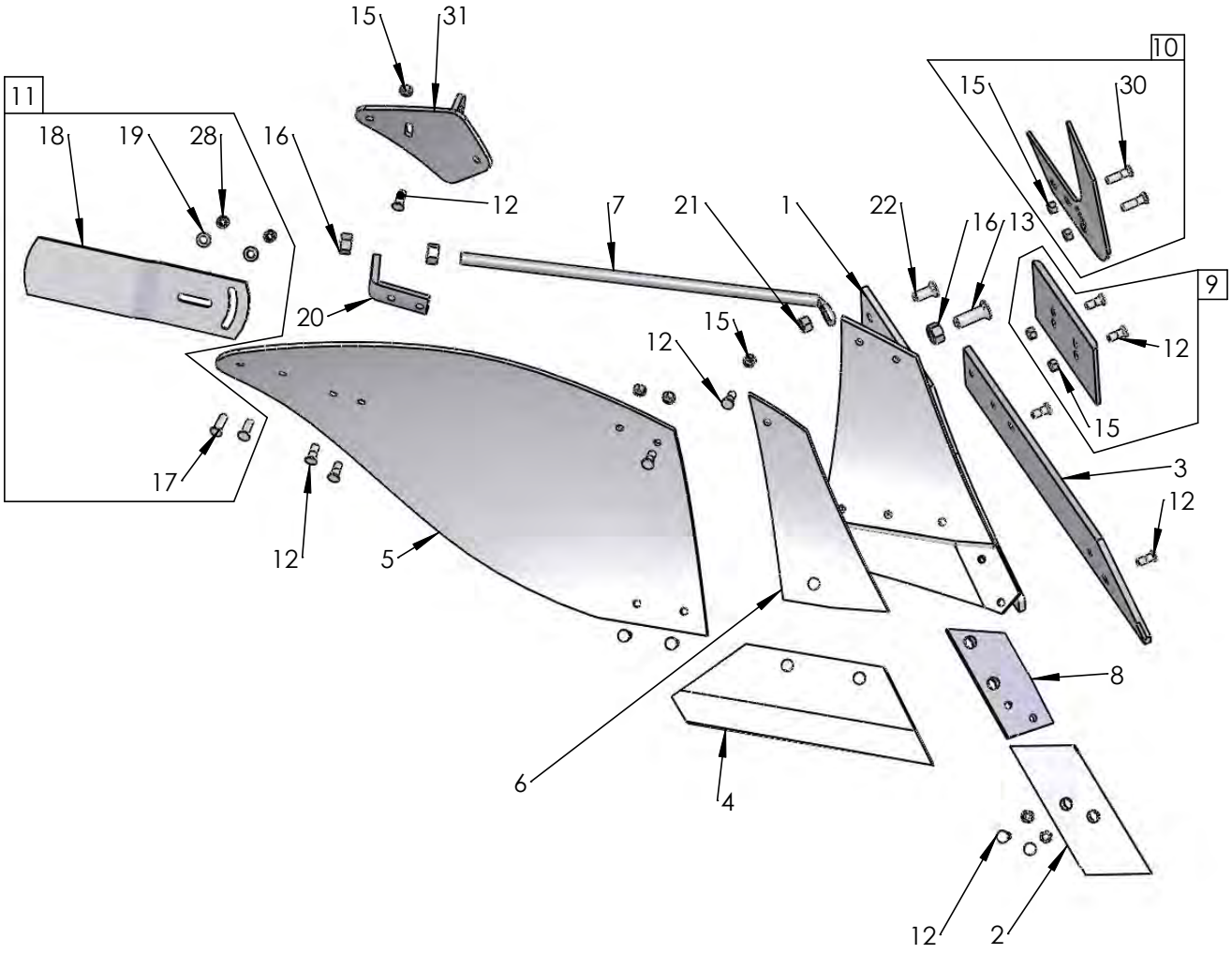
15
31
10
11
15
30
18
19
28
16
12
7
21
1
22
16
13
9
20
15
12
12
15
17
3
12
12
5
8
6
4
12
2

660

| Pos nr<br>Pos.Nr<br>Ref.No<br>Fig.Nº. | Detalj nr<br>Best.Nr<br>Part No<br>Code Nº. | | Benämning | Bezeichnung | Description | Description |
|---|---|---|---|---|---|---|
| **182** | | **XU** | **PLOGKROPP** | **PFLUGKÖRPER** | **PLOUGH BOTTOMS** | **CORPS DE CHARRUE** |
| | | R= | Höger | Rechts | Right | Droite |
| | | L= | Vänster | Links | Left | Gauche |
| 1 | 1652 05 40 90 | L | Ställ | Rumpf | Frog | Sep |
| | 1652 05 39 90 | R | Ställ | Rumpf | Frog | Sep |
| 2 | 1659 46 09 09 | L | Spets | Scharspitze | Share point | Pointe |
| | 1659 46 08 09 | R | Spets | Scharspitze | Share point | Pointe |
| 3 | 1659 60 95 09 | L | Landsida | Landseite | Landside | Contre-sep |
| | 1659 60 94 09 | R | Landsida | Landseite | Landside | Contre-sep |
| 4 | 1659 60 91 09 | 16" L | Skär | Schar | Share | Soc |
| | 1659 60 90 09 | 16" R | Skär | Schar | Share | Soc |
| | 1659 60 93 09 | 18" L | Skär | Schar | Share | Soc |
| | 1659 60 92 09 | 18" R | Skär | Schar | Share | Soc |
| 5 | 1659 60 85 99 | XU/L | Vändskiva | Streichblech | Mouldboard | Versoir |
| | 1659 60 84 99 | XU/R | Vändskiva | Streichblech | Mouldboard | Versoir |
| 6 | 1659 60 87 09 | L | Vändskivebröst | Streichblechbrust | Mouldboard shin | Epaulement de versoir |
| | 1659 60 86 09 | R | Vändskivebröst | Streichblechbrust | Mouldboard shin | Epaulement de versoir |
| 7 | 1659 61 04 90 | | Stötta | Haltestrebe | Support stay | Renfort de versoir |
| 8 | 1659 46 13 09 | L | Fäste | Halter | Bracket plate | Plaque de serrage |
| | 1659 46 12 09 | R | Fäste | Halter | Bracket plate | Plaque de serrage |
| 9 | 1659 42 89 09 | | Slitplatta kompl | Verschleissplatte kompl. | Wearing plate compl. | Plaque d'usure cpl. |
| 10 | 1659 46 23 99 | L | Knivrist | Anlagensech | Fin coulter | Coutre aileron |
| | 1659 46 22 99 | R | Knivrist | Anlagensech | Fin coulter | Coutre aileron |
| 11 | 1658 54 62 50 | XU/L | Tiltvinge kompl | Streichschiene kompl. | Mouldboard extens. compl. | Rallonge de versoir cpl. |
| | 1658 54 61 50 | XU/R | Tiltvinge kompl | Streichschiene kompl. | Mouldboard extens. compl. | Rallonge de versoir cpl. |
| 12 | 1650 36 12 21 | MFBKF 12x29 | Skruv | Schraube | Bolt | Vis |
| 13 | 1650 36 02 57 | MFBK 20x60 | Skruv | Schraube | Bolt | Vis |
| 15 | 1650 36 13 03 | M6M 12x1,25 | Mutter | Mutter | Nut | Ecrou |
| 16 | 1650 36 04 07 | M6M 20 | Mutter | Mutter | Nut | Ecrou |
| 17 | 1650 36 02 23 | MFBK 12x40 | Skruv | Schraube | Bolt | Vis |
| 18 | 1658 05 59 50 | XU/L | Tiltvinge | Streichschiene | Mouldboard extens. | Rallonge de versoir |
| | 1657 49 22 50 | XU/R | Tiltvinge | Streichschiene | Mouldboard extens. | Rallonge de versoir |
| 19 | 734 11 78 01 | BRB 13x24 | Bricka | Scheibe | Washer | Rondelle |
| 20 | 1659 46 15 90 | | Stöttvinkel | Halter | Bracket | Support |
| 21 | 731 23 24 01 | M6M 16 | Mutter | Mutter | Nut | Ecrou |
| 22 | 1650 36 02 33 | MFBK 16x40 | Skruv | Schraube | Bolt | Vis |
| 28 | 1650 36 04 03 | M6M 12 | Mutter | Mutter | Nut | Ecrou |
| 30 | 1650 36 12 24 | MFBKF 12x45 | Skruv | Schraube | Bolt | Vis |
| 31 | 1652 42 62 50 | L | Vinkelstötta | Halter | Bracket | Support |
| | 1652 42 60 50 | R | Vinkelstötta | Halter | Bracket | Support |

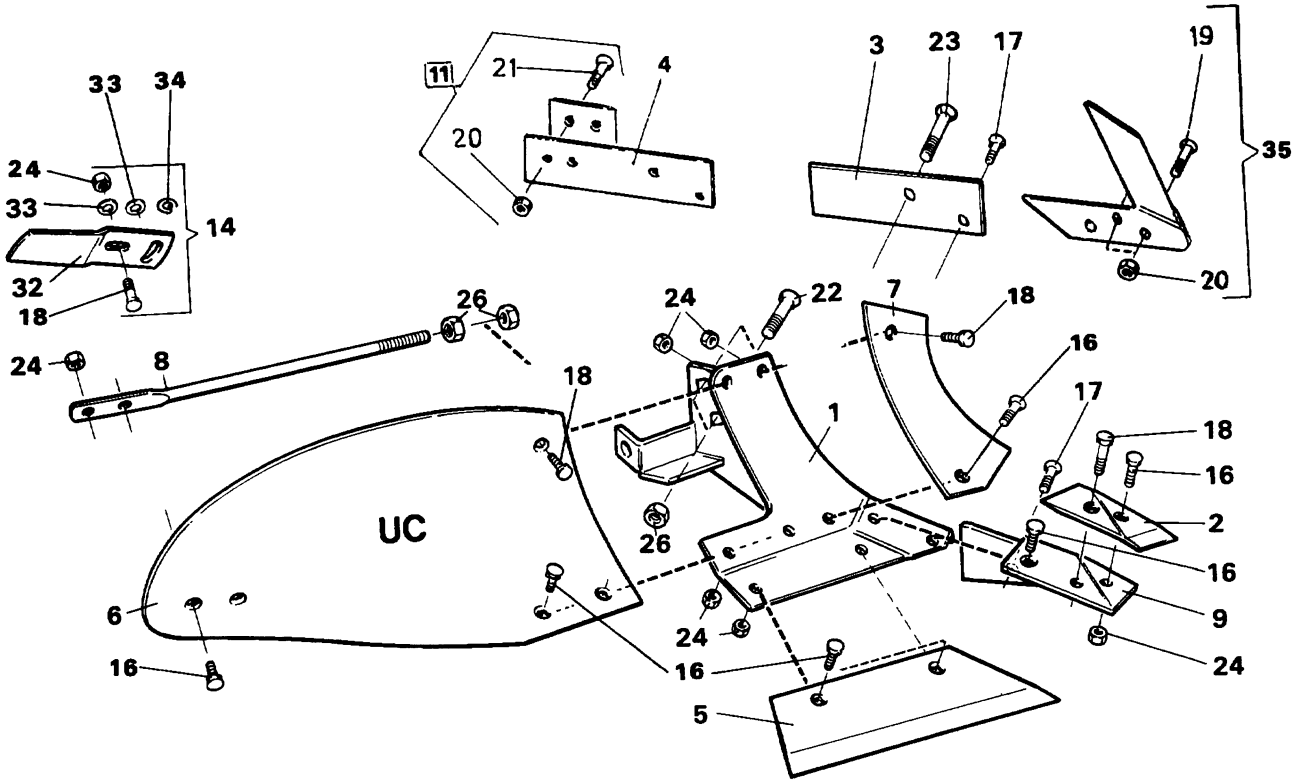

33
34
24
33
14
32
18
24
8
26
11
21
4
20
3
23
17
19
35
20
24
22
7
18
16
17
18
16
2
16
9
24
1
18
UC
26
6
16
24
16
5


**16d**

| Pos nr<br>Pos.Nr<br>Ref.No<br>Fig.N°. | Detalj nr<br>Best.Nr<br>Part No<br>Code N°. | | Benämning | Bezeichnung | Description | Description |
|---|---|---|---|---|---|---|
| **16d** | | **UC** | **PLOGKROPP** | **PFLUGKÖRPER** | **PLOUGH BOTTOMS** | **CORPS DE CHARRUE** |
| | | R= | Höger | Rechts | Right | Droite |
| | | L= | Vänster | Links | Left | Gauche |
| 1 | 1658 40 91 90 | L | Ställ | Rumpf | Frog | Sep |
| | 1658 40 90 90 | R | Ställ | Rumpf | Frog | Sep |
| 2 | 1659 22 07 09 | L (85 143) | Spets | Scharspitze | Share point | Pointe |
| | 1659 22 06 09 | R (84 060) | Spets | Scharspitze | Share point | Pointe |
| 3 | 1658 51 96 09 | L | Landsida kort | Landseite kurz | Landside short | Contre-sep court |
| | 1658 39 81 09 | R | Landsida kort | Landseite kurz | Landside short | Contre-sep court |
| 4 | 1659 42 87 09 | L | Landsida lång | Landseite lang | Landside long | Contre-sep long |
| | 1659 42 86 09 | R | Landsida lång | Landseite lang | Landside long | Contre-sep long |
| 5 | 1658 51 93 09 | 12" L | Skär | Schar | Share | Soc |
| | 1658 50 03 09 | 12" R | Skär | Schar | Share | Soc |
| | 1658 51 94 09 | 14" L | Skär | Schar | Share | Soc |
| | 1658 50 04 09 | 14" R | Skär | Schar | Share | Soc |
| | 1658 51 95 09 | 16" L | Skär | Schar | Share | Soc |
| | 1658 50 39 09 | 16" R | Skär | Schar | Share | Soc |
| 6 | 1658 40 87 99 | UC/L | Vändskiva | Streichblech | Mouldboard | Versoir |
| | 1658 40 31 99 | UC/R | Vändskiva | Streichblech | Mouldboard | Versoir |
| 7 | 1658 40 82 09 | L | Vändskivebröst | Streichblechbrust | Mouldboard shin | Epaulement de versoir |
| | 1658 40 33 09 | R | Vändskivebröst | Streichblechbrust | Mouldboard shin | Epaulement de versoir |
| 8 | 1658 60 06 90 | UC | Stötta | Haltestrebe | Support stay | Renfort de versoir |
| 9 | 1658 51 91 09 | L | Fäste | Halter | Bracket plate | Plaque de serrage |
| | 1658 49 58 09 | R | Fäste | Halter | Bracket plate | Plaque de serrage |
| 11 | 1659 42 89 09 | | Slitplatta kompl | Verschleissplatte kompl. | Wearing plate compl. | Plaque d'usure cpl. |
| 12 | 1659 42 89 00 | | Slitplatta | Verschleissplatte | Wearing plate | Plaque d'usure |
| 14 | 1658 54 62 50 | V/L | Tiltvinge kompl | Streichschiene kompl. | Mouldboard extens. compl. | Rallonge de versoir cpl. |
| | 1658 54 61 50 | V/R | Tiltvinge kompl | Streichschiene kompl. | Mouldboard extenx. compl. | Rallonge de versoir cpl. |
| 16 | 1650 36 02 21 | MFBK 12x28 | Skruv | Schraube | Bolt | Vis |
| 17 | 1650 36 02 22 | MFBK 12x35 | Skruv | Schraube | Bolt | Vis |
| 18 | 1650 36 02 23 | MFBK 12x40 | Skruv | Schraube | Bolt | Vis |
| 19 | 1650 36 12 24 | MFBKF 12x45 | Skruv | Schraube | Bolt | Vis |
| 20 | 1650 36 13 03 | M6M 12x1,25 | Mutter | Mutter | Nut | Ecrou |
| 22 | 1650 36 02 57 | MFBK 20x60 | Skruv | Schraube | Bolt | Vis |
| 23 | 1650 36 02 58 | MFBK 20x75 | Skruv | Schraube | Bolt | Vis |
| 24 | 731 23 22 01 | M6M 12 | Mutter | Mutter | Nut | Ecrou |
| 26 | 1650 36 04 07 | M6M 20 | Mutter | Mutter | Nut | Ecrou |
| 32 | 1657 49 22 50 | V/R | Tiltvinge | Streichschiene | Mouldboard extens. | Rallonge de versoir |
| | 1658 05 59 50 | V/L | Tiltvinge | Streichschiene | Mouldboard extens. | Rallonge de versoir |
| 33 | 734 11 78 01 | BRB 13x24 | Bricka | Scheibe | Washer | Rondelle |
| 34 | 1658 66 21 00 | | Bricka | Scheibe | Washer | Rondelle |
| 35 | 1659 46 22 09 | R | Knivrist kompl | Anlagensech kompl. | Fin coulter compl. | Coutre aileron cpl. |
| | 1659 46 23 09 | L | Knivrist kompl | Anlagensech kompl. | Fin coulter compl. | Coutre aileron cpl. |

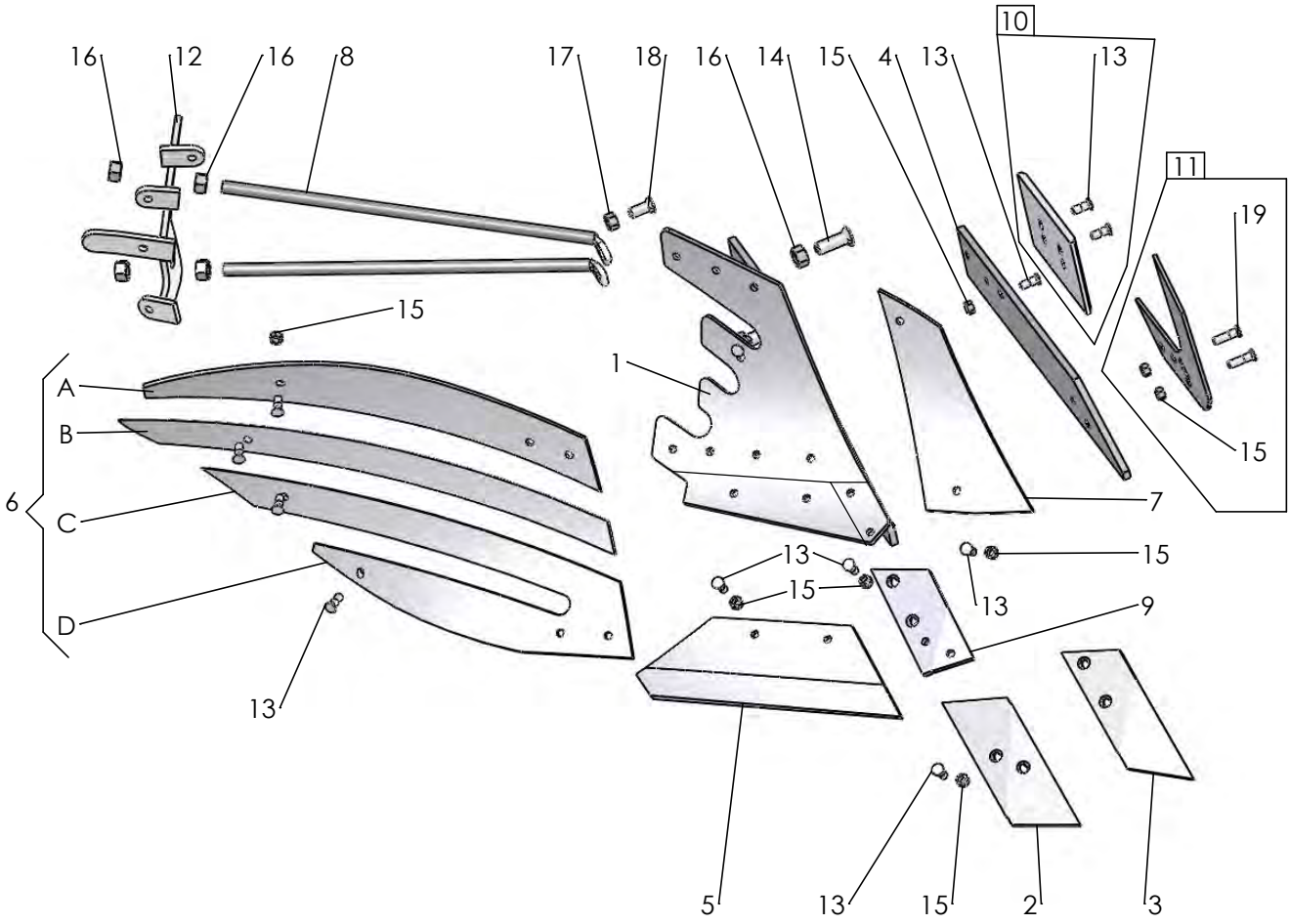
16
12
16
8
17
18
16
14
15
4
13
10
13
11
19
15
1
A
B
6
C
D
15
13
13
15
15
13
9
7
13
5
13
15
2
3

665

| Pos nr<br>Pos.Nr<br>Ref.No<br>Fig.Nº. | Detalj nr<br>Best.Nr<br>Part No<br>Code Nº. | | Benämning | Bezeichnung | Description | Description |
|---|---|---|---|---|---|---|
| **290** | | **XS** | **PLOGKROPP** | **PFLUGKÖRPER** | **PLOUGH BOTTOMS** | **CORPS DE CHARRUE** |
| | | R= | Höger | Rechts | Right | Droite |
| | | L= | Vänster | Links | Left | Gauche |
| 1 | 1652 16 20 90 | L | Ställ | Rumpf | Frog | Sep |
| | 1652 16 19 90 | R | Ställ | Rumpf | Frog | Sep |
| 2 | 1659 46 09 09 | L | Spets | Scharspitze | Share point | Pointe |
| | 1659 46 08 09 | R | Spets | Scharspitze | Share point | Pointe |
| 3 | 1659 62 73 09 | L | Spets nedsänkt | Scharspitze | Share point | Pointe |
| | 1659 62 72 09 | R | Spets nedsänkt | Scharspitze | Share point | Pointe |
| 4 | 1659 60 95 09 | L | Landsida | Landseite | Landside | Contre-sep |
| | 1659 60 94 09 | R | Landsida | Landseite | Landside | Contre-sep |
| 5 | 1659 60 91 09 | 16" L | Skär | Schar | Share | Soc |
| | 1659 60 90 09 | 16" R | Skär | Schar | Share | Soc |
| | 1659 60 93 09 | 18" L | Skär | Schar | Share | Soc |
| | 1659 60 92 09 | 18" R | Skär | Schar | Share | Soc |
| 6 | 1652 02 77 99 | XS/L | Vändskiva | Streichblech | Mouldboard | Versoir |
| | 1652 02 48 99 | XS/R | Vändskiva | Streichblech | Mouldboard | Versoir |
| | | | (Pos.nr A,B,C,D) | (Pos.Nr A,B,C,D) | (Ref.No.A,B,C,D) | (Fig.No.A,B,C,D) |
| | | | (Pos.nr A,B,C,D) | (Pos.Nr A,B,C,D) | (Ref.No.A,B,C,D) | (Fig.No.A,B,C,D) |
| A | 1652 02 49 59 | R | Strimla A | Streifen A | Stripe A | Bande A |
| | 1652 08 94 59 | L | Strimla A | Streifen A | Stripe A | Bande A |
| B | 1652 02 50 59 | R | Strimla B | Streifen B | Stripe B | Bande B |
| | 1652 08 95 59 | L | Strimla B | Streifen B | Stripe B | Bande B |
| C | 1652 02 51 59 | R | Strimla C | Streifen C | Stripe C | Bande C |
| | 1652 08 96 59 | L | Strimla C | Streifen C | Stripe C | Bande C |
| D | 1652 02 52 59 | R | Strimla D | Streifen D | Stripe D | Bande D |
| | 1652 08 97 59 | L | Strimla D | Streifen D | Stripe D | Bande D |
| 7 | 1652 15 99 09 | L | Vändskivebröst | Streichblechbrust | Mouldboard shin | Epaulement de versoir |
| | 1652 14 70 09 | R | Vändskivebröst | Streichblechbrust | Mouldboard shin | Epaulement de versoir |
| 8 | 1659 61 04 90 | | Stötta | Haltestrebe | Support stay | Renfort de versoir |
| 9 | 1659 46 13 09 | L | Fäste | Halter | Bracket plate | Plaque de serrage |
| | 1659 46 12 09 | R | Fäste | Halter | Bracket plate | Plaque de serrage |
| 10 | 1659 42 89 09 | | Slitplatta kompl | Verschleissplatte kompl. | Wearing plate compl. | Plaque d'usure cpl. |
| 11 | 1659 46 23 99 | L | Knivrist | Anlagensech | Fin coulter | Coutre aileron |
| | 1659 46 22 99 | R | Knivrist | Anlagensech | Fin coulter | Coutre aileron |
| 12 | 1652 02 68 50 | R | Brygga | Brücke | Bridge | Pont |
| | 1652 02 78 50 | L | Brygga | Brücke | Bridge | Pont |
| 13 | 1650 36 12 21 | MFBKF 12x29 | Skruv | Schraube | Bolt | Vis |
| 14 | 1650 36 02 57 | MFBK 20x60 | Skruv | Schraube | Bolt | Vis |
| 15 | 1650 36 13 03 | M6M 12x1,25 | Mutter | Mutter | Nut | Ecrou |
| 16 | 731 23 26 01 | M6M 20 | Mutter | Mutter | Nut | Ecrou |
| 17 | 731 23 24 01 | M6M 16 | Mutter | Mutter | Nut | Ecrou |
| 18 | 1650 36 02 33 | MFBK 16x40 | Skruv | Schraube | Bolt | Vis |
| 19 | 1650 36 12 24 | MFBKF 12x45 | Skruv | Schraube | Bolt | Vis |

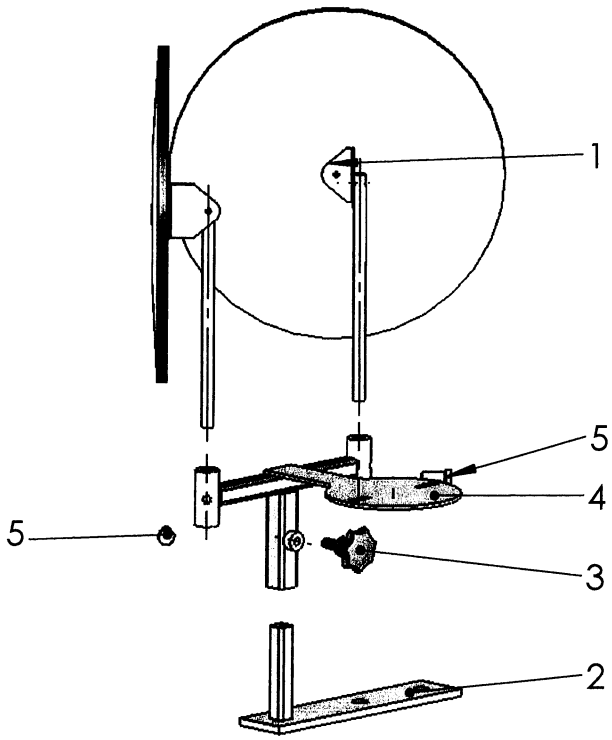


527

| Pos nr<br>Pos.Nr<br>Ref.No<br>Fig.Nº. | Detalj nr<br>Best.Nr<br>Part No<br>Code Nº. | | Benämning | Bezeichnung | Description | Description |
|---|---|---|---|---|---|---|
| **527** | | | **SPEGEL** | **SPIEGEL** | **MIRROR** | **MIROIR** |
| 1 | 1652 63 32 00 | | Spegel | Spiegel | Mirror | Miroir |
| 2 | 1652 63 35 00 | | Rampfäste | Befestigung | Mounting | Attache |
| 3 | 1652 63 31 00 | | Stjärnvred | Handgriff | Knob | Bouton |
| 4 | 1652 63 39 00 | | Fäste | Halter | Bracket | Support |
| 5 | 725 24 93 51 | M6S 10x25 | Skruv | Schraube | Bolt | Vis |

From serial No. 13 288780

adding value to the green world

1656 80 05 10 – 2013-09-01

You can always find the latest version of the manuals at www.kongskilde.com