ÖVERUM

FX

# Reservdelsförteckning
# Ersatzteilliste
# Spare parts list
# Cataloge de pieces rechange

| Sida<br>Seite<br>Page<br>Page | Bild<br>Bild<br>Fig.No.<br>Fig.Nº. | Typ | Innehålsförtekning | Inhaltsverzeichnis | Index of contents | Table des matieres |
|---|---|---|---|---|---|---|
| 3 | 521 | | VÄNDCYLINDER | WENDEZYLINDER | REVERSING | VÉRIN CPL. |
| 5 | 518 | FX | HYDRAULISK SIDOREGLERING | HYDRAULISCHE SCHNITTBREITEN-VERSTELLUNG | HYDRAULIC FRONT-FURROW ADJUSTER | DEPORTATEURE HYDRAULIQUE |
| 7 | 509 | FX | TOPP | KOPSTÜCK | HEADSTOCK | TETE |
| 9 | 445 | H | ÅSHUS | GRINDELGEHÄUSE | BEAM HOUSING | SUPPORT D'AGE |
| 11 | 516 | FX | STENSÄKRINGS-HYDRAULIK | HYDRAUIISCHER STEINSICHERUNG | HYDRAULIC STONE TRIP | DISPOSITIF DE SECURITE HYDRAULIQUE |
| 13 | 507 | | FRONTHJUL | FRONT RAD | FRONT WHEEL | ROUE F FRONTALE |
| 15 | 519 | | SKIVRIST | SCHEIBENSECH | DISC COULTER | COUTRE CIRCULAIRE |
| 17 | 15 | XL,XU,XS UC | SKUMVINGE | EINLEGER-STREICHBLECH | COVERBOARD | DEFLECTEUR |
| 19 | 520 | | SKUMRIST | VORSCHÄLER | SKIMMER | RASETTE |
| 21 | 103d | XL,XLP | PLOGKROPP | PFLUGKÖRPER | PLOUGH BOTTOMS | CORPS DE CHARRUE |
| 23 | 182 | XU | PLOGKROPP | PFLUGKÖRPER | PLOUGH BOTTOMS | CORPS DE CHARRUE |
| 25 | 16d | UC | PLOGKROPP | PFLUGKÖRPER | PLOUGH BOTTOMS | CORPS DE CHARRUE |
| 27 | 290 | XS | PLOGKROPP | PFLUGKÖRPER | PLOUGH BOTTOMS | CORPS DE CHARRUE |
| 29 | 527 | | SPEGEL | SPIEGEL | MIRROR | MIROIR |

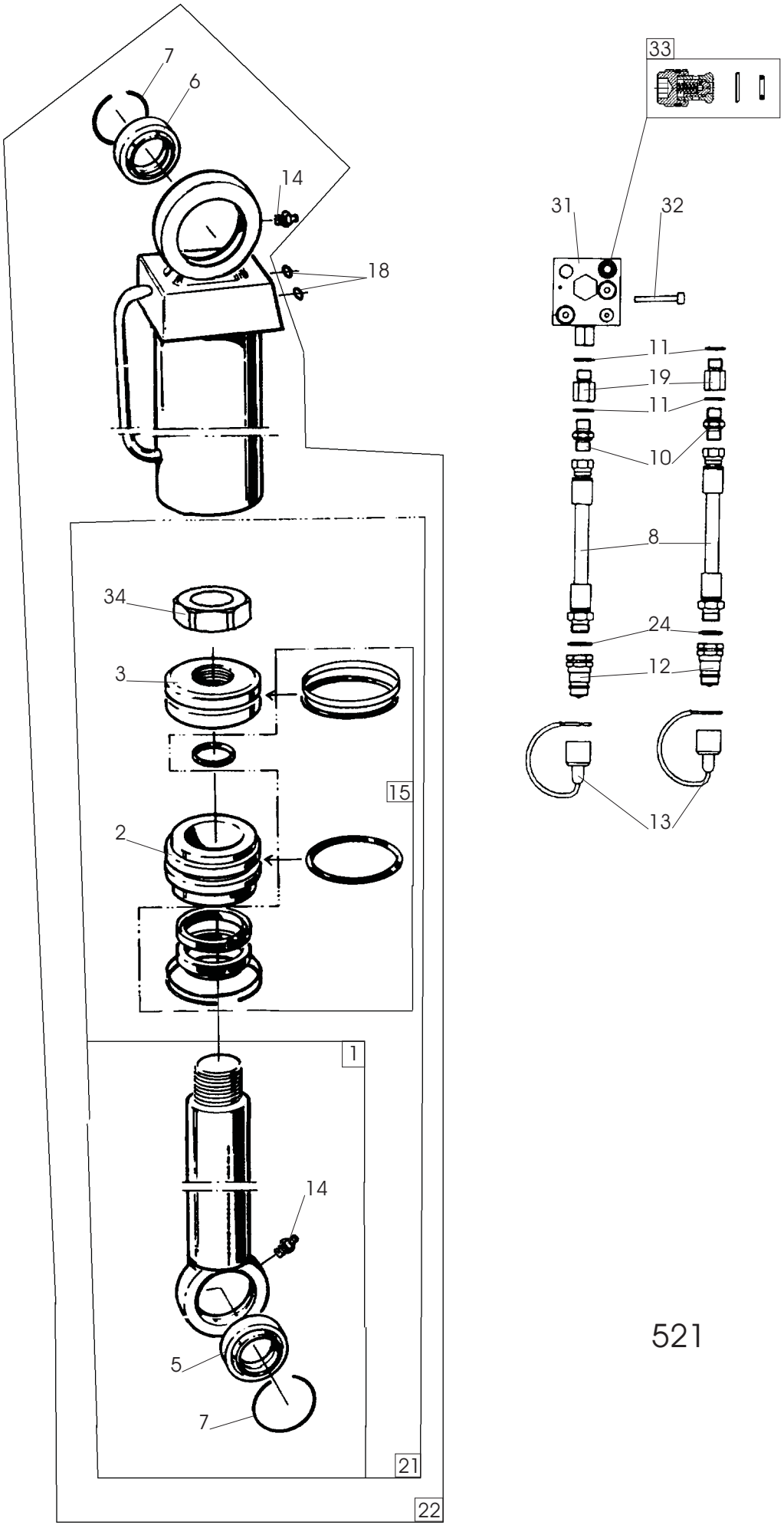


521

| Pos nr<br>Pos.Nr<br>Ref.No<br>Fig.Nº. | Detalj nr<br>Best.Nr<br>Part No<br>Code Nº. | | Benämning | Bezeichnung | Description | Description |
|---|---|---|---|---|---|---|
| **521** | | | **VÄNDCYLINDER** | **WENDEZYLINDER** | **REVERSING** | **VÉRIN CPL.** |
| 1 | 1652 55 25 00 | | Kolvstång | Kolbenstange | Piston rod | Tige de piston |
| 2 | 1659 46 66 00 | | Styrning | Führung | Guide | Guidage |
| 3 | 1652 55 29 00 | | Kolv | Kolben | Piston | Piston |
| 5 | 1659 13 08 01 | | Lager | Lager | Bearing | Palier |
| 6 | 1658 64 05 03 | | Lager | Lager | Bearing | Palier |
| 7 | 735 31 44 11 | | Låsring | Kopfring | Lock ring | Bague d'arrêt |
| 8 | 1659 88 35 00 | L=1500 3/8-1/2 | Slang | Schlauch | Hose | Tuyau flexible |
| 10 | 1659 24 34 00 | | Rak adapt | Verbindungsstück | Union | Raccord |
| 11 | 1659 44 17 00 | 3/8 | Tätningsbricka | Dichtungsscheibe | Sealing washer | Rondelle d'étanchéité |
| 12 | 1657 48 14 00 | ISO-G1/2 | Handel | Schnellkupplung M | Quick coupling M | Raccord rapide M |
| 13 | 1657 83 83 00 | | Handelsskydd | Schutz | Guard | Protection |
| 14 | 738 88 20 02 | | Smörjnippel | Schmiernippel | Grease nipple | Graisseur |
| 15 | 1659 46 68 00 | | Packningssats | Packungsgarnitur | Set of seals | Jeu de joints |
| 18 | 740 43 07 00 | | O-ring | O-ring | O-ring | Joint thorique |
| 19 | 1659 46 67 00 | | Adapt med filter | Verbindungsstück mit Filter | Union with filter | Raccord avec filtre |
| 21 | 1652 55 26 00 | | Kolvstång monterad | Kolbenstange kompl. | Piston rod compl. | Tige de piston cpl. |
| 22 | 1652 55 14 50 | | Vändcylinder utan ve | Wendezylinder | Reversing | Vérin cpl. |
| 24 | 1658 03 16 00 | 1/2 | Tätningsbricka | Dichtungsscheibe | Sealing washer | Rondelle d'étanchéité |
| 31 | 1652 55 12 50 | | Ventil kompl All-In-On | Ventil kompl.All-In-One | Valve compl.All-In-One | Soupape cpl.All-In-One |
| 32 | 725 54 69 91 | MC6S 8x90 | Skruv | Schraube | Bolt | Vis |
| 33 | 1652 60 80 00 | | Backventil sats | Rückschlagklappe satz | Check valve set | Valve f à levée jeu de |
| 34 | 1652 60 25 00 | | Mutter | Mutter | Nut | Ecrou |

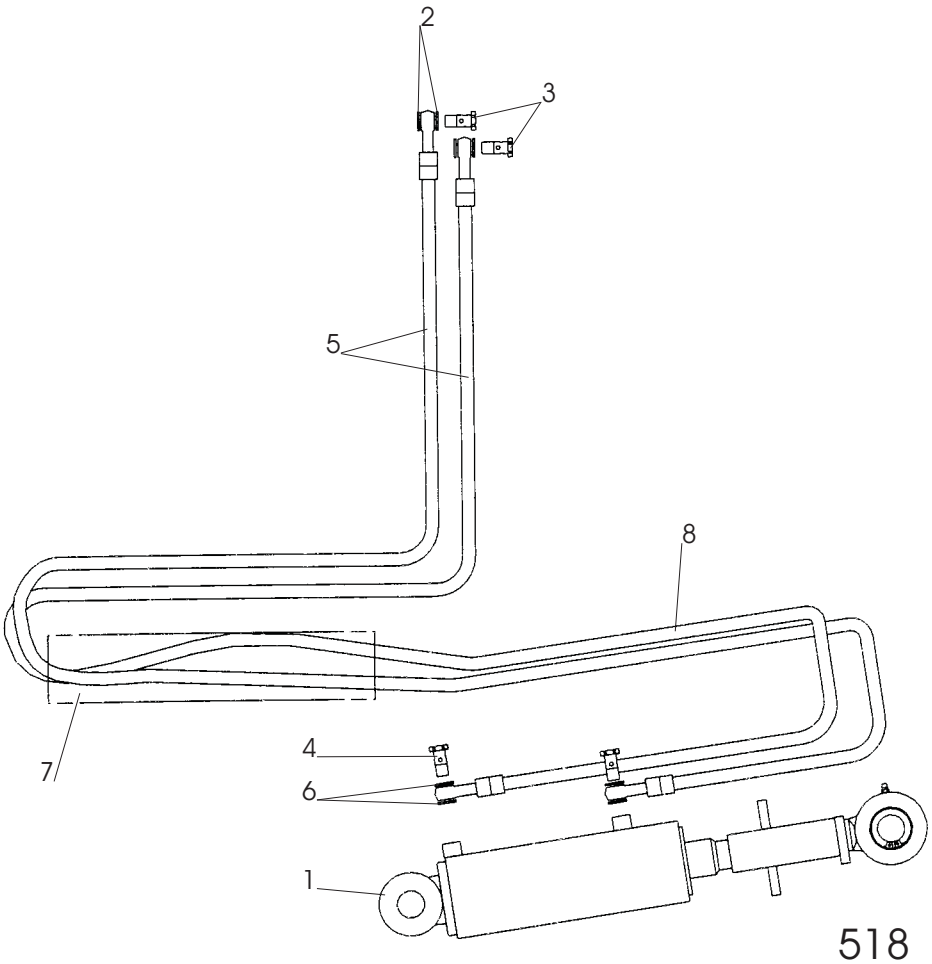


518

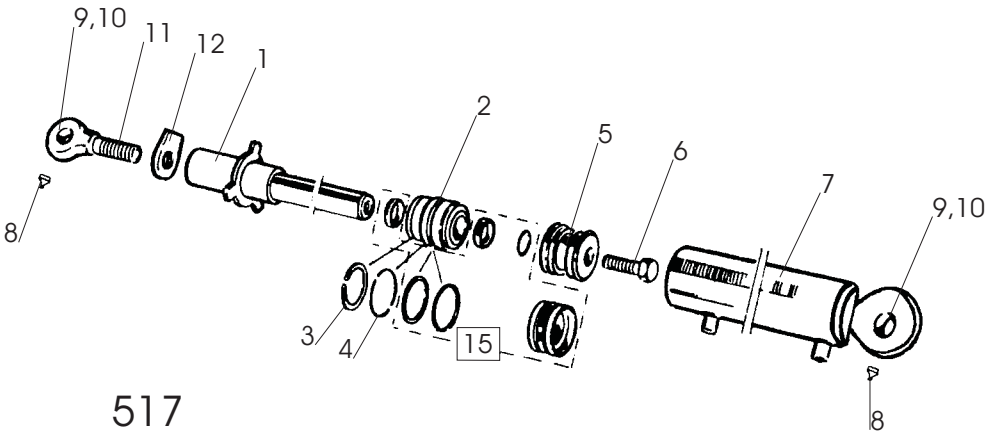


517

| Pos nr<br>Pos.Nr<br>Ref.No<br>Fig.Nº. | Detalj nr<br>Best.Nr<br>Part No<br>Code Nº. | | Benämning | Bezeichnung | Description | Description |
|---|---|---|---|---|---|---|
| **518** | | **FX** | **HYDRAULISK UTRÄTNING** | **HYDRAULISCHE ZENTRIRUNG-ZYLINDER** | **HYDRAULIC ALIGNMENT** | **VÉRIN D'ALIGNEMENT** |
| | 1652 52 92 50 | | Hydraulisk Uträtning | Hydraulische Zentrirungzylinder | Hydraulic Alignment | Vérin d'alignement |
| 1 | 1652 59 25 50 | | Hydr cylinder | Hydr.Zylinder | Hydr.cylinder | Vérin cpl. |
| 2 | 1659 44 17 00 | 3/8 | Tätningsbricka | Dichtungsscheibe | Sealing washer | Rondelle d'étanchéité |
| 3 | 1659 57 74 00 | 3/8 | Anslutningsskruv | Schraube | Bolt | Vis |
| 4 | 1652 33 39 00 | 1/4 | Anslutningsskruv | Schraube | Bolt | Vis |
| 5 | 1652 55 32 00 | L=2800 | Slang | Schlauch | Hose | Tuyau flexible |
| 6 | 1651 29 83 01 | 1/4 | Tätningsbricka | Dichtungsscheibe | Sealing washer | Rondelle d'étanchéité |
| 7 | 1652 10 43 00 | | Skyddsslang | Schlauch | Hose | Tuyau flexible |
| 8 | 1652 35 89 00 | | Buntband | Bundband | Self-locking ties | Collier |
| **517** | | **FX** | **HYDR CYLINDER** | **HYDR.ZYLINDER** | **HYDR.CYLINDER** | **VÉRIN CPL.** |
| | 1652 59 25 50 | | Hydr cylinder | Hydr.Zylinder | Hydr.cylinder | Vérin cpl. |
| 1 | 1652 59 24 50 | | Kolvstång | Kolbenstange | Piston rod | Tige de piston |
| 2 | 1659 38 06 00 | | Styrning | Führung | Guide | Guidage |
| 3 | 1658 92 07 00 | AV 75 | Spårring | Sicherungsring | Circlip | Circlips |
| 4 | 1658 92 06 00 | | Låsringshalvor | Sicherungsring | Lock ring | Bague d'arrêt |
| 5 | 1658 91 99 00 | | Kolv | Kolben | Piston | Piston |
| 6 | 725 26 75 51 | M6S 20x55 | Skruv | Schraube | Bolt | Vis |
| 7 | 1652 60 31 50 | | Cylinderrör | Zylindermantel | Cylinder jacket | Corps de cylindre |
| 8 | 738 88 20 01 | AH M6 | Smörjnippel | Schmiernippel | Grease nipple | Graisseur |
| 9 | 1658 64 05 02 | | Ledlager | Lager | Bearing | Palier |
| 10 | 735 31 40 11 | | Låsring | Kopfring | Lock ring | Bague d'arrêt |
| 11 | 1659 58 63 50 | | Stångände | Kolbenstangenende | Piston rod end | Ext.tige piston |
| 12 | 1659 30 79 00 | | Låsarm | Kontermutter | Locking nut | Ecrou de verrouillage |
| 15 | 1659 38 10 00 | | Packningssats | Packungsgarnitur | Set of seals | Jeu de joints |

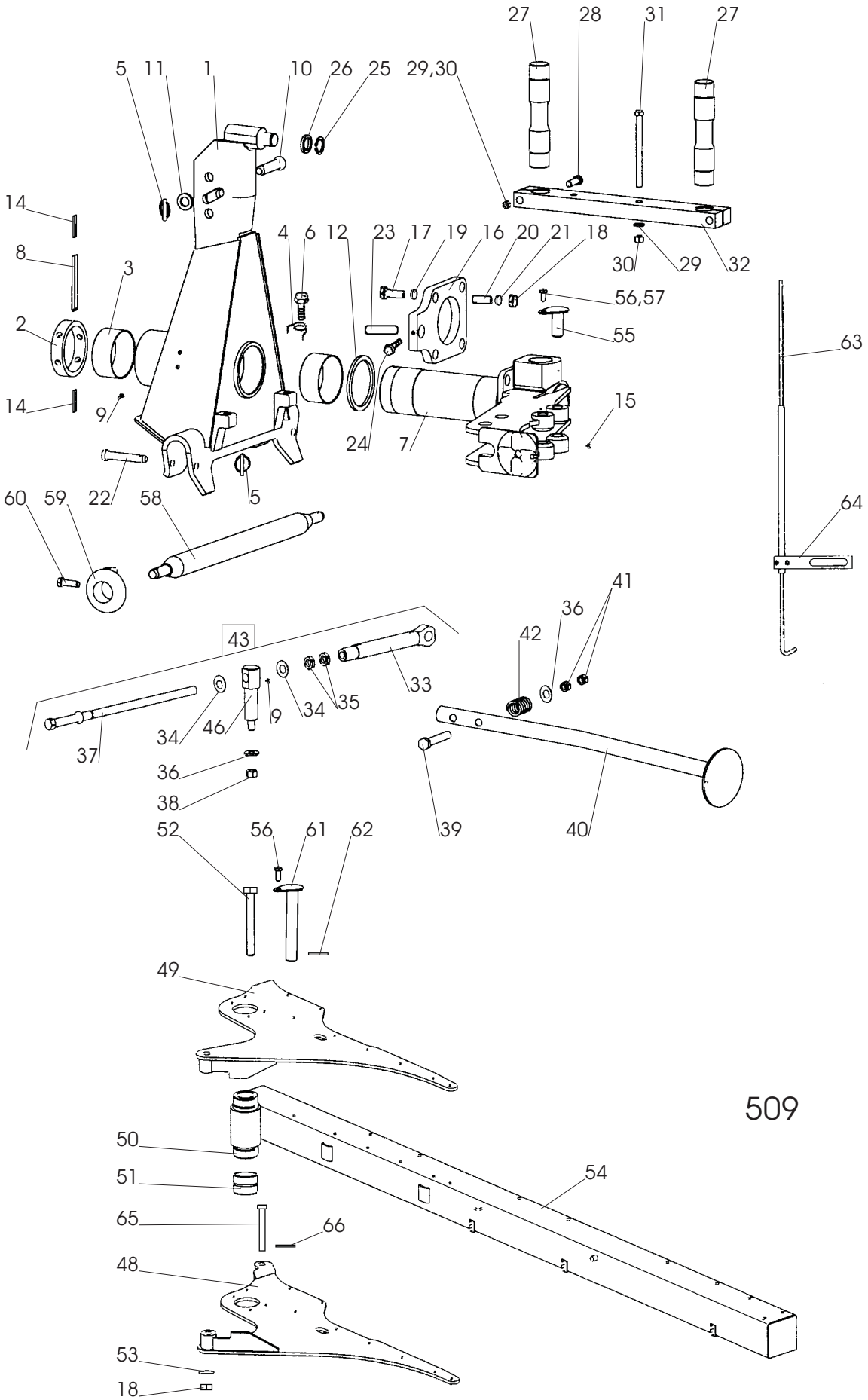
27
28
31
27
5
11
1
10
26
25
29,30
14
8
3
2
14
9
4
6
12
23
17
19
16
20
21
18
30
29
32
56,57
55
63
15
24
7
60
59
22
58
5
64
41
36
42
43
33
35
34
9
46
34
37
36
38
39
40
52
56
61
62
49
50
51
65
66
54
48
53
18
509

| Pos nr<br>Pos.Nr<br>Ref.No<br>Fig.Nº. | Detalj nr<br>Best.Nr<br>Part No<br>Code Nº. | | Benämning | Bezeichnung | Description | Description |
|---|---|---|---|---|---|---|
| **509** | | **FX** | **TOPP** | **KOPSTÜCK** | **HEADSTOCK** | **TETE** |
| 1 | 1659 38 70 90 | | Topp | Kopfstück | Headstock | Tete |
| 2 | 1658 61 65 00 | | Låsring | Kopfring | Lock ring | Bague d'arret |
| 3 | 1658 53 00 00 | | Lager | Lager | Bearing | Palier |
| 4 | 1658 57 79 00 | | Friktionsfjäder | Reibungsfeder | Friction spring | Ressort friction |
| 5 | 1658 50 05 00 | | Snabblås | Klappsplint | Linch pin | Goupille |
| 6 | 1658 56 93 00 | | Skruv | Schraube | Bolt | Vis |
| 7 | 1659 83 88 91 | | Medbringare | Dreharm | Turn-over arm | Bras de retournem. |
| 8 | 721 45 80 01 | FRP 16x150 | Rörpinne | Hohlstift | Tension pin | Goupille cannelée |
| 9 | 738 88 20 03 | AM 8x1,25 | Smörjnippel | Schmiernippel | Grease nipple | Graisseur |
| 10 | 1658 67 19 00 | | Toppstångsbult | Oberlenkerbolzen | Top link pin | Axe de 3e point |
| 11 | 734 12 00 01 | BRB 26x45 | Bricka | Scheibe | Washer | Rondelle |
| 12 | 1658 61 66 00 | | Distansring | Distanzring | Spacing ring | Anneau d'ecart |
| 14 | 721 44 23 01 | FRP 10x60 | Rörpinne | Hohlstift | Tension pin | Goupille cannelée |
| 15 | 738 88 50 03 | BM 8x1,25 | Smörjnippel | Schmiernippel | Grease nipple | Graisseur |
| 16 | 1659 83 87 90 | | Vridplåt | Platte | Plating | Plaque f |
| 17 | 725 26 36 81 | M6S 16x80 | Skruv | Schraube | Bolt | Vis |
| 18 | 1650 36 04 05 | M6M 16 | Mutter | Mutter | Nut | Ecrou |
| 19 | 1658 64 33 00 | | Bricka | Scheibe | Washer | Rondelle |
| 20 | 1658 62 40 08 | FRP 28x40 | Rörpinne | Hohlstift | Tension pin | Goupille cannelée |
| 21 | 1658 58 84 00 | BRB 17x38 | Bricka | Scheibe | Washer | Rondelle |
| 22 | 1659 30 05 00 | | Tapp | Zylinderbolzen | Pivot pin | Axe |
| 23 | 1659 00 34 00 | | Cylindertapp | Zylinderstift | Cylindrical pin | Cheville cylind. |
| 24 | 725 25 01 51 | M6S 10x50 | Skruv | Schraube | Bolt | Vis |
| 25 | 735 31 33 01 | SGA 35 | Spårring | Nutring | Circlip | Circlips |
| 26 | 1659 03 74 00 | | Bricka | Scheibe | Washer | Rondelle |
| 27 | 1659 43 20 50 | | Ledaxel | Gelenkarm | Link arm | Bras d'articul |
| 28 | 725 26 88 81 | M6S 20x120 | Skruv | Schraube | Bolt | Vis |
| 29 | 734 11 92 01 | BRB 21x37 | Bricka | Scheibe | Washer | Rondelle |
| 30 | 1650 36 50 07 | M6M 20 | Låsmutter | Nyloc-Mutter | Lock nut | Ecrou de freiné |
| 31 | 725 27 07 81 | M6S 20x360 | Skruv | Schraube | Bolt | Vis |
| 32 | 1659 34 01 90 | | Mellanlänk | Gelenk | Link | Articultion |
| 33 | 1652 62 78 00 | | Justerhylsa | Stellhülse | Adjusting sleeve | Manchon de |
| 34 | 1659 84 96 00 | | Tallriksbricka | Scheibe | Washer | Rondelle |
| 35 | 731 43 28 01 | ML6M 24 | Mutter | Mutter | Nut | Ecrou |
| 36 | 1659 48 28 00 | | Bricka | Scheibe | Washer | Rondelle |
| 37 | 1659 32 51 00 | | Spindel | | | |
| 38 | 732 21 26 51 | M6M 20 | Mutter | Mutter | Nut | Ecrou |
| 39 | 725 26 90 51 | M6S 20x130 | Skruv | Schraube | Bolt | Vis |
| 40 | 1659 55 27 90 | | Stödben | Stützbein | Stand | Beguille |
| 41 | 731 43 26 01 | ML6M 20 | Mutter | Mutter | Nut | Ecrou |
| 42 | 1658 58 82 90 | | Tryckfjäder | Drückfeder | Compression spring | Ressort de linquet |
| 43 | 1652 55 62 00 | | Mekanisk 1:a tilta | Mechanische Einstellung | Mechanical front furrow | Deportateure mecanique |
| 46 | 1652 55 61 00 | | Ledtapp | Führungszapfen | Lead axle | Axe de guidage |
| 48 | 1652 55 56 90 | | Länkplåt övre | Strebe oberer | Cross brace upper | Tringle supérieur |
| 49 | 1652 55 57 90 | | Länkplåt undre | Strebe unterer | Cross brace lower | Tringle inférieur |
| 50 | 1659 83 89 90 | | Länkhylsa | Hülse | Sleeve | Manchon |
| 51 | 1659 43 21 00 | | Glidlager | Lager | Bearing | Palier |
| 52 | 725 26 53 81 | M6S 16x200 | Skruv | Schraube | Bolt | Vis |
| 53 | 734 11 86 01 | BRB 17x30 | Bricka | Scheibe | Washer | Rondelle |
| 54 | 1652 59 91 91 | FX 2100 | Ram | Rahmen | Main frame | Châssis-poutre |
| | 1652 59 91 92 | FX 3100 | Ram | Rahmen | Main frame | Châssis-poutre |
| 55 | 1659 69 12 00 | | Låstapp | Zylinderbolzen | Pivot pin | Cheville |
| 56 | 725 25 34 51 | M6S 12x25 | Skruv | Schraube | Bolt | Vis |
| 57 | 1658 94 89 00 | | Bricka | Scheibe | Washer | Rondelle |
| 58 | 1658 60 85 90 | ø28x825 | Bäraxel | Tragachse | Cross shaft | Barre d'attelage |
| 59 | 1659 30 20 90 | | Styrkon | Führungskegel | Guide cone | Cone de guidage |
| 60 | 725 25 38 51 | M6S 12x35 | Skruv | Schraube | Bolt | Vis |
| 61 | 1659 65 30 00 | | Låstapp | Zylinderbolzen | Pivot pin | Cheville |
| 62 | 721 43 84 01 | FRP 8x45 | Rörpinne | Hohlstift | Tension pin | Goupille cannelée |
| 63 | 1652 60 93 00 | | Mätsticka | Messtab m. | Indicator | Indicateur du niveau |
| 64 | 1652 60 94 00 | | Fäste | Halter | Bracket | Support |
| 65 | 1658 54 69 00 | ø30 | Cylindrisk bult | Bolzen | Pivot pin | Cheville |
| 66 | 721 43 47 01 | FRP 6x40 | Rörpinne | Hohlstift | Tension pin | Goupille cannelée |

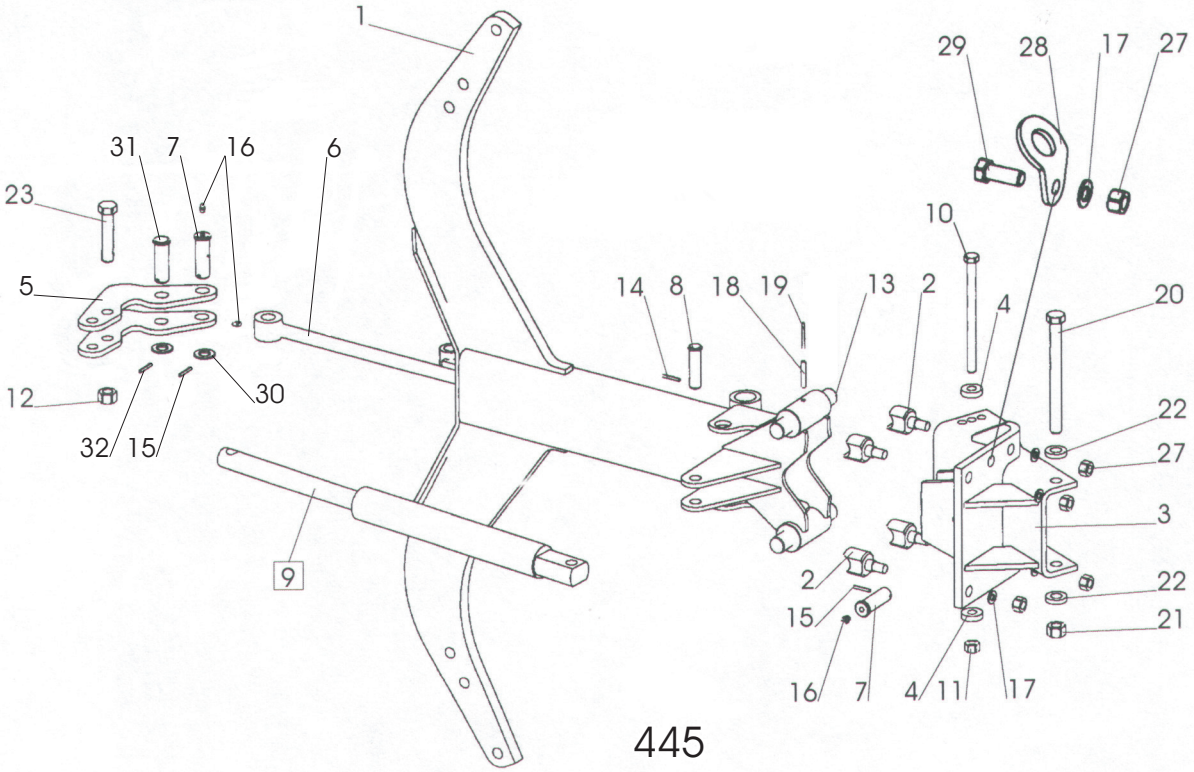
1
29
28
17
27
31
7
16
6
23
10
5
14
8
18
19
13
2
4
20
12
30
22
27
32
15
3
9
2
22
15
21
16
7
4
11
17

445

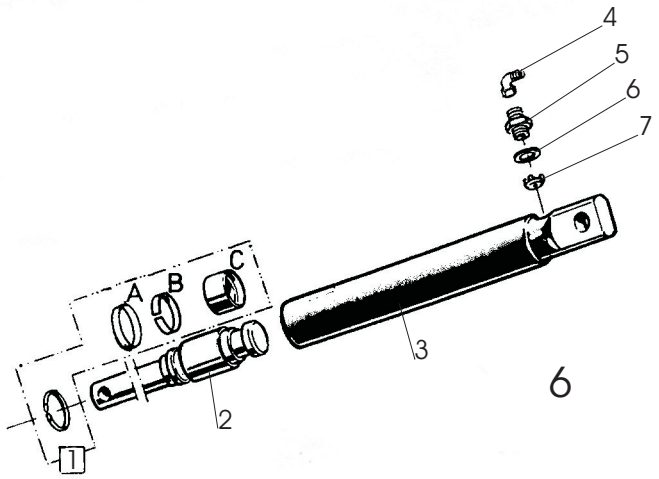
4
5
6
7
A
B
C
3
2
1

6

| Pos nr<br>Pos.Nr<br>Ref.No<br>Fig.№. | Detalj nr<br>Best.Nr<br>Part No<br>Code №. | | Benämning | Bezeichnung | Description | Description |
|---|---|---|---|---|---|---|
| **445** | | **H** | **ÅSHUS** | **GRINDELGEHÄUSE** | **BEAM HOUSING** | **SUPPORT D'AGE** |
| 1 | 1658 60 43 90 | 730 | Ås | Grindel | Beam | Age |
| | 1659 61 12 90 | 800 | Ås | Grindel | Beam | Age |
| 2 | 1658 60 80 00 | | Säte | Sitz | Seat | Siége |
| 3 | 1659 95 00 90 | | Åsfäste | Grindelgehäuse | Beam housing | Support d'age |
| 4 | 1658 58 84 00 | | Bricka | Scheibe | Washer | Rondelle |
| 5 | 1658 60 56 90 | | Hävarm | Hebelarm | Walking beam | Bras de levier |
| | 1652 15 55 90 | | Hävarm | Hebelarm | Walking beam | Bras de levier |
| 6 | 1652 59 02 50 | | Dragstång | Zugstange | Draw rod | Barre f d'attelage |
| 7 | 1658 60 79 00 | | Tapp | Zylinderbolzen | Pivot pin | Axe |
| 8 | 1657 23 99 01 | ø20 | Cylindrisk bult | Bolzen | Pivot pin | Cheville |
| 9 | 1652 15 50 50 | | Hydr cylinder kompl | Hydr. Zylinder kompl. | Hydr. Cylinder compl. | Vérin hydraulique cpl. |
| 10 | 1659 08 56 00 | M6S 16x215 | Skruv | Schraube | Bolt | Vis |
| 11 | 1650 36 07 05 | M6M 16 12 | Mutter | Mutter | Nut | Ecrou |
| 12 | 1650 36 50 07 | Locking 20 | Mutter | Mutter | Nut | Ecrou |
| 13 | 1658 60 44 00 | | Tapp | Zylinderbolzen | Pivot pin | Axe |
| 14 | 721 42 62 01 | FRP 4x32 | Rörpinne | Hohlstift | Tension pin | Goupille cannelée |
| 15 | 721 43 15 01 | FRP 5x36 | Rörpinne | Hohlstift | Tension pin | Goupille cannelée |
| 16 | 738 88 20 03 | AM 8x1,25 | Smörjnippel | Schmiernippel | Grease nipple | Graisseur |
| 17 | 734 11 92 01 | BRB 21x37 | Bricka | Scheibe | Washer | Rondelle |
| 18 | 721 43 85 01 | FRP 8x50 | Rörpinne | Hohlstift | Tension pin | Goupille cannelée |
| 19 | 721 43 18 01 | FRP 5x50 | Rörpinne | Hohlstift | Tension pin | Goupille cannelée |
| 20 | 1659 05 31 00 | M6S 20x215 | Skruv | Schraube | Bolt | Vis |
| 21 | 1650 36 07 07 | M6M 20 12 | Mutter | Mutter | Nut | Ecrou |
| 22 | 1658 35 87 00 | | Bricka | Scheibe | Washer | Rondelle |
| 23 | 1659 19 45 00 | | Skruv | Schraube | Bolt | Vis |
| 24 | 1659 80 96 00 | 800 | Cylindrisk pinne | Zapfen | Pin | Axe |
| 27 | 731 23 26 51 | M6M 20 | Mutter | Mutter | Nut | Ecrou |
| 28 | 1652 22 43 60 | | Lyftfäste | Transporthebeösen | Lifting device | Crochet de manurention |
| 29 | 725 26 74 81 | M6S 20x50 | Skruv | Schraube | Bolt | Vis |
| 30 | 734 12 00 01 | BRB 26x45 | Bricka | Scheibe | Washer | Rondelle |
| 31 | 1652 59 14 00 | ø25 | Cylindrisk bult | Bolzen | Pivot pin | Cheville |
| 32 | 721 43 47 01 | FRP 6x40 | Rörpinne | Hohlstift | Tension pin | Goupille cannelée |
| **6** | | | **HYDRAULISK UTLÖSNINGS-CYLINDER** | **HYDRAULISCHER STEINSICHERUNG ZYLINDER** | **HYDRAULIC STONE TRIP CYLINDER** | **DISPOSITIF DE SECURITE HYDRAULIQUE** |
| | 1652 15 50 50 | ø50 | Hydr cylinder kompl utan Pos. nr 4 | Hydr.Zylinder kompl.ohne Pos.Nr 4 | Hydr.cylinder compl.without Ref.No.4 | Vérin cpl.sons Fig.No. 4 |
| 1 | 1658 62 56 00 | | Packningssats | Packungsgarnitur | Set of seals | Jeu de joints |
| 2 | 1652 38 02 50 | Inkl A,B,C | Kolvstång | Kolbenstange | Piston rod | Tige de piston |
| 3 | 1652 15 51 50 | | Cylinderrör | Zylindermantel | Cylinder jacket | Corps de cylindre |
| 4 | 1657 78 26 00 | | L-adapt | Winkel-Stück | Elbow union | Raccord angle |
| 5 | 1658 03 17 00 | | Adapt | Verbindungsstück | Union | Raccord |
| 6 | 1658 03 16 00 | | Tätningsbricka | Dishtungsscheibe | Sealing washer | Rondelle d'étanchéité |
| 7 | 1657 78 52 00 | | Ventilkägla | Ventilkegel | Valve conical | Soupape a cone |

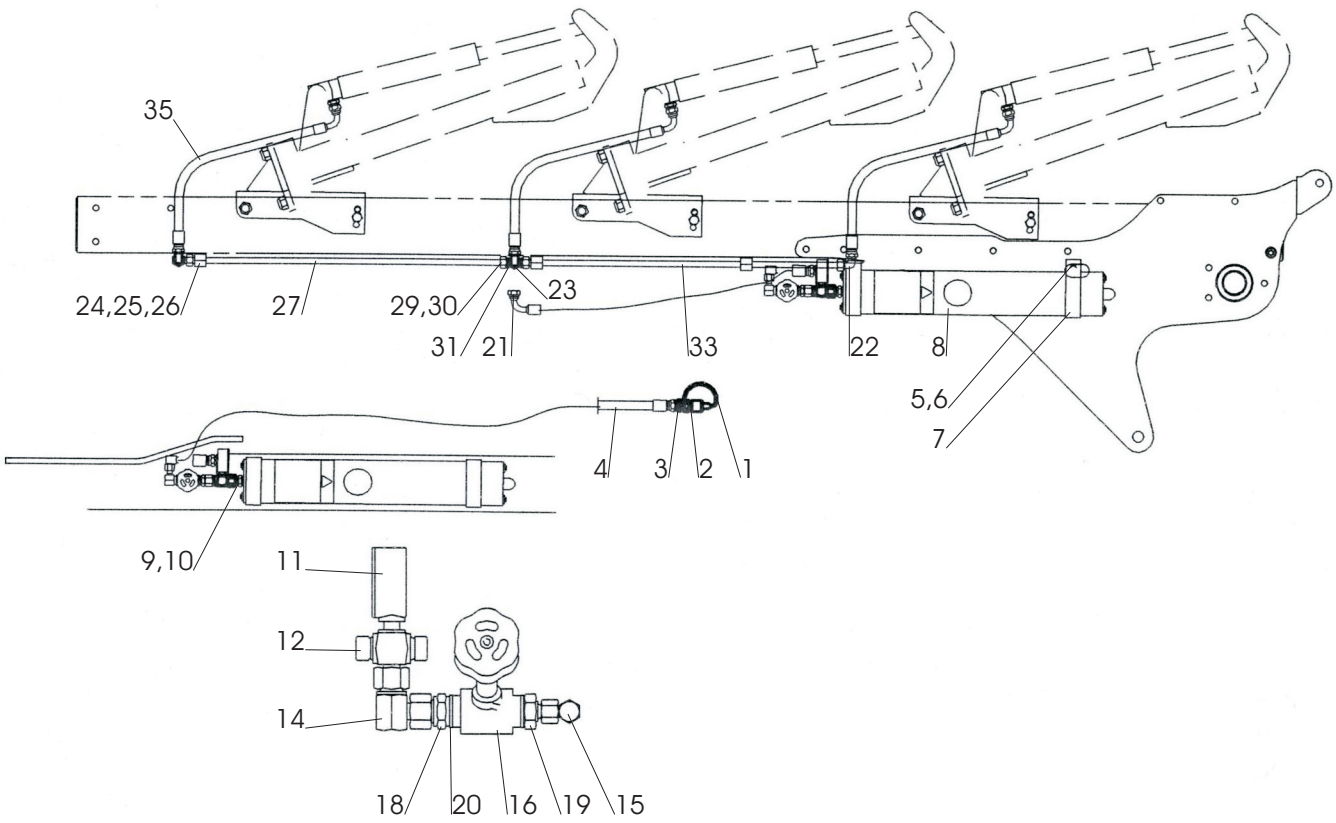
35
24,25,26
27
29,30
23
31
21
33
22
8
5,6
7
4
3
2
1
9,10
11
12
14
18
20
16
19
15

516

| Pos nr<br>Pos.Nr<br>Ref.No<br>Fig.Nº. | Detalj nr<br>Best.Nr<br>Part No<br>Code Nº. | | Benämning | Bezeichnung | Description | Description |
|---|---|---|---|---|---|---|
| **516** | | **FX** | **STENSÄKRINGS-HYDRAULIK** | **HYDRAUIISCHER STEINSICHERUNG** | **HYDRAULIC STONE TRIP** | **DISPOSITIF DE SECURITE HYDRAULIQUE** |
| 1 | 1657 83 83 00 | | Handelsskydd | Schutz | Guard | Protection |
| 2 | 1657 48 14 00 | | Handel | Schnellkupplung M | Quick coupling M | Raccord rapide M |
| 3 | 1657 72 31 00 | | Adapt | Verbindungsstück | Union | Raccord |
| 4 | 1651 42 91 00 | L=3100 | Slang | Schlauch | Hose | Tuyau flexible |
| 5 | 725 25 50 51 | M6S 12x90 | Skruv | Schraube | Bolt | Vis |
| 6 | 731 23 22 01 | M6M 12 | Mutter | Mutter | Nut | Ecrou |
| 7 | 1659 17 79 50 | | Band | Halter | Cord | Support |
| 8 | 1659 19 38 50 | | Ackumulator | Akkumulator | Accumulator | Accumulateur |
| 9 | 1659 21 38 00 | | Adapt | Verbindungsstück | Union | Raccord |
| 10 | 1658 03 16 00 | | Tätningsbricka | Dichtungsscheibe | Sealing washer | Rondelle d'étanchéité |
| 11 | 1658 07 50 00 | | Manometer | Druckmesser | Pressure gauge | Manometré |
| 12 | 1657 78 38 00 | | T-adapt | T-Stück | T-union | Raccord en T |
| 14 | 1657 78 26 00 | | L-adapt | Winkel-Stück | Elbow union | Raccord angle |
| 15 | 1658 56 36 00 | | L-adapt | Winkel-Stück | Elbow union | Raccord angle |
| 16 | 1657 30 57 00 | | Ventil | Ventil | Valve | Soupape |
| 18 | 1656 54 78 00 | | Adapt | Verbindungsstück | Union | Raccord |
| 19 | 1657 72 31 00 | | Adapt | Verbindungsstück | Union | Raccord |
| 20 | 1658 03 16 00 | | Tätningsbricka | Dichtungsscheibe | Sealing washer | Rondelle d'étanchéité |
| 21 | 1652 60 76 00 | L=920 | Slang | Schlauch | Hose | Tuyau flexible |
| 22 | 1657 57 47 00 | | L-adapt | Winkel-Stück | Elbow union | Raccord angle |
| 23 | 1658 30 50 00 | | L-adapt | Winkel-Stück | Elbow union | Raccord angle |
| 24 | 1659 12 04 00 | | Klammerhalvor | Klammer | Clamps | Colliers |
| 25 | 1659 12 05 00 | | Täckplatta | Deckblech | Covering plate | Plaque de recouvrement |
| 26 | 725 23 76 51 | M6S 6x35 | Skruv | Schraube | Bolt | Vis |
| 27 | 1659 19 36 00 | L=860 FX 2 | Rör | Rohr | Tube | Tuyau |
| | 1658 62 76 00 | L=960 FX 3 | Rör | Rohr | Tube | Tuyau |
| 29 | 1657 59 34 00 | | Mutter | Mutter | Nut | Ecrou |
| 30 | 1657 59 35 00 | | Skärring | Scneidring | Olive | Olive |
| 31 | 1657 57 46 00 | FX 2 | T-adapt | T-Stück | T-union | Raccord en T |
| | 1657 59 28 00 | FX 3 | X-adapt | X-Stück | X-union | Raccord en X |
| 33 | 1659 61 38 00 | FX 290,390 | Rör | Rohr | Tube | Tuyau |
| | 1652 30 48 00 | FX 2100,3100 | Rör | Rohr | Tube | Tuyau |
| 35 | 1659 88 51 00 | L=690 | Slang | Schlauch | Hose | Tuyau flexible |

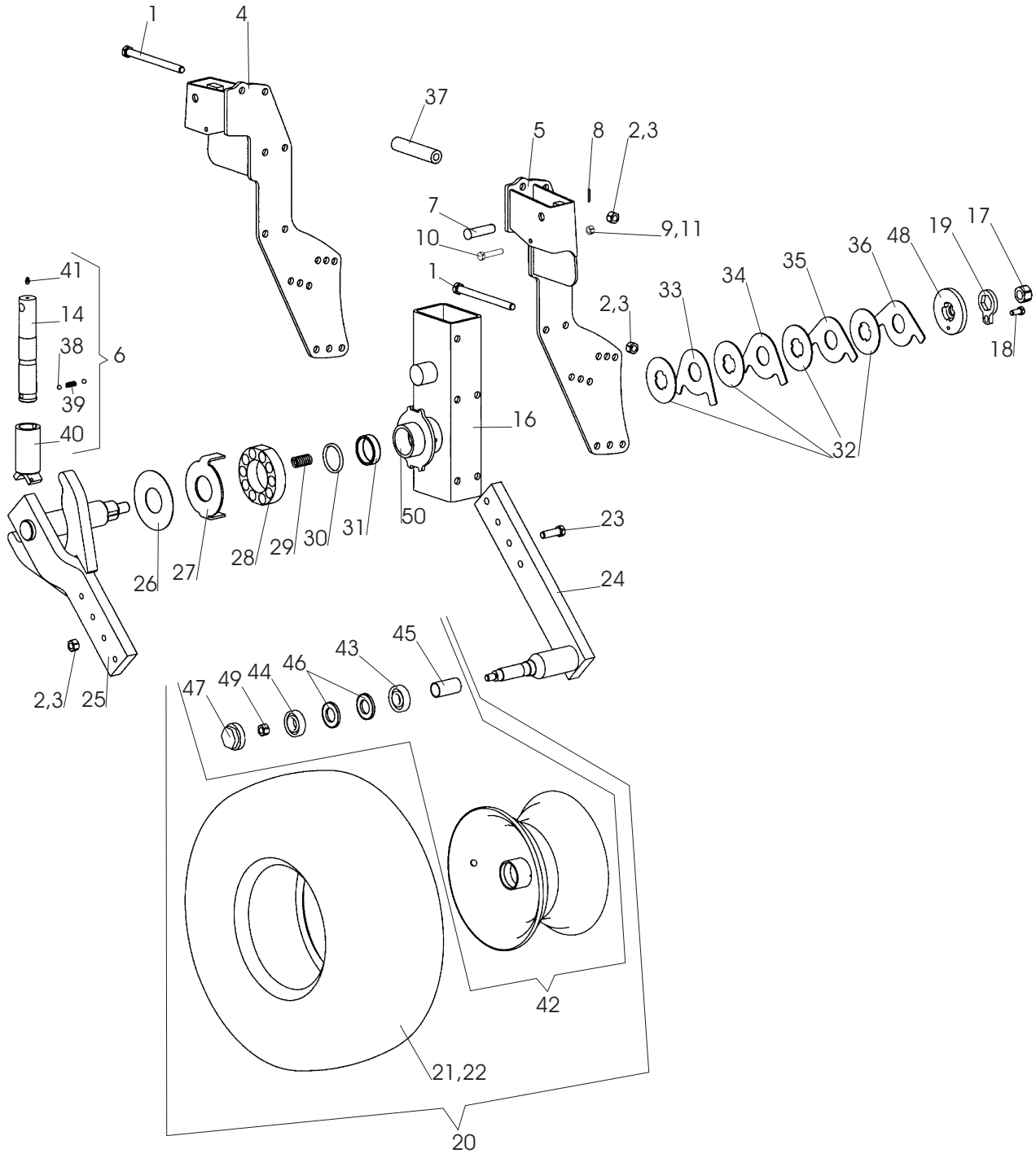
1
4
37
5
8
2,3
7
9,11
10
1
2,3
41
14
38
6
39
40
16
33
34
35
36
48
19
17
18
32
23
24
50
26
27
28
29
30
31
2,3
25
45
43
47
49
44
46
42
21,22
20

507

| Pos nr<br>Pos.Nr<br>Ref.No<br>Fig.Nº. | Detalj nr<br>Best.Nr<br>Part No<br>Code Nº. | | Benämning | Bezeichnung | Description | Description |
|---|---|---|---|---|---|---|
| **507** | | | **FRONTHJUL** | **FRONT RAD** | **FRONT WHEEL** | **ROUE F FRONTALE** |
| | 1652 52 90 90 | | Fronthjul | Front rad | Front wheel | Roue f frontale |
| 1 | 725 26 53 81 | M6S 16x200 | Skruv | Schraube | Bolt | Vis |
| 2 | 1650 36 04 05 | M6M 16 | Mutter | Mutter | Nut | Ecrou |
| 3 | 734 11 86 01 | BRB 17x30 | Bricka | Scheibe | Washer | Rondelle |
| 4 | 1652 52 74 90 | | Hjulkonsol övre | Radkonsole obere | Whell bracket upper | Roue support fixation supérieur |
| 5 | 1652 52 75 90 | | Hjulkonsol nedre | Radkonsole unterer | Whell bracket lower | Roue support fixation inférieur |
| 6 | 1652 40 10 00 | | Kläpp komplett | Falle | Catch | Loquet |
| 7 | 1657 32 24 01 | | Cyl bult | Zylinderbolzen | Pivot pin | Cheville |
| 8 | 721 42 62 01 | FRP 4x32 | Rörpinne | Hohlstift | Tension pin | Goupille cannelée |
| 9 | 734 11 73 01 | BRB 10,5x20 | Bricka | Scheibe | Washer | Rondelle |
| 10 | 725 25 09 51 | M6S 10x90 | Skruv | Schraube | Bolt | Vis |
| 11 | 732 21 20 51 | M6M 10 | Mutter | Mutter | Nut | Ecrou |
| 14 | 1652 37 67 00 | | Kläpp | Falle | Catch | Loquet |
| 16 | 1652 52 80 90 | | Hjulkonsol | Radkonsole | Whell bracket | Roue support fixation |
| 18 | 725 24 93 51 | M6S 10x25 | Skruv | Schraube | Bolt | Vis |
| 19 | 1652 26 37 00 | | Låsbricka | Sicherungsscheibe | Lock washer | Rondelle d'arrêt |
| 20 | 1659 73 36 50 | 10,0/8-12 | Hjul kompl | Rad kompl. | Wheel compl. | Roue cpl. |
| 21 | 1659 73 38 00 | 10,0/8-12 | Däck | Reifen | Tyre | Pneu |
| 22 | 1659 73 37 00 | 8,50-12/10 | Slang | Schlauch | Hose | Tuyau flexible |
| 23 | 725 26 36 81 | M6S 16x80 | Skruv | Schraube | Bolt | Vis |
| 24 | 1652 52 82 90 | | Hjularm nedre | Radachse | Wheel axle | Essieu de roue |
| 25 | 1652 52 84 90 | | Hjularm övre | Radachse | Wheel axle | Essieu de roue |
| 26 | 1652 26 53 00 | | Slitbricka | Scheibe | Washer | Rondelle |
| 27 | 1652 26 52 00 | | Bricka | Scheibe | Washer | Rondelle |
| 28 | 1652 26 51 00 | | Fjäderhållare | Halter | Bracket | Support fixation |
| 29 | 1652 12 67 00 | | Tryckfjäder | Drückfeder | Compression | Ressort de |
| 30 | 1652 38 72 00 | | Quad ring | Ring | Ring | Bague |
| 31 | 1652 38 71 00 | | Hylsa | Hülse | Sleeve | Manchon |
| 32 | 1652 06 20 00 | | Bromsskiva | Bremsring | Brake disc | Disque de frein |
| 33 | 1652 12 51 00 | | Stoppbricka | Sperrscheibe | Stop washer | Rondelle d'arrêt |
| 34 | 1652 12 50 00 | | Stoppbricka | Sperrscheibe | Stop washer | Rondelle d'arrêt |
| 35 | 1652 06 23 00 | | Stoppbricka | Sperrscheibe | Stop washer | Rondelle d'arrêt |
| 36 | 1652 06 22 00 | | Stoppbricka | Sperrscheibe | Stop washer | Rondelle d'arrêt |
| 37 | 1659 79 75 00 | | Distanshylsa | Distanzhülse | Spacing sleeve | Bague |
| 38 | 738 61 32 02 | | Kula | Kugel | Ball | Bille |
| 39 | 1658 30 46 00 | | Fjäder | Feder | Spring | Ressort |
| 40 | 1652 39 84 00 | | Hylsa | Hülse | Sleeve | Manchon |
| 41 | 738 88 20 03 | AM 8x1,25 | Smörjnippel | Schmiernippel | Grease nipple | Graisseur |
| 42 | 1659 73 39 50 | | Fälg med nav | Felge mit nabe | Rim with hub | Jante avec moyeu |
| 43 | 738 22 06 19 | | Kullager | Kugellager | Ball bearing | Palier a billes |
| 44 | 738 23 05 34 | | Kullager | Kugellager | Ball bearing | Palier a billes |
| 45 | 1659 34 70 00 | | Distans | Distance | Spacing | Distance |
| 46 | 1659 34 73 00 | | Tätning | Dichtung | Seal | Garniture |
| 47 | 1659 34 69 00 | | Navkapsel | Nabenkappe | Hub cap | Chapeau de moyeu |
| 48 | 1652 26 38 00 | | Platta | Platte | Plate | Plaque |
| 49 | 732 21 24 51 | M6M 16 | Låsmutter | Nylock-Mutter | Lock nut | Ecrou freiné |
| 50 | 1658 56 25 00 | | Glidlager | Gleitlager | Plain bearing | Coussinet |

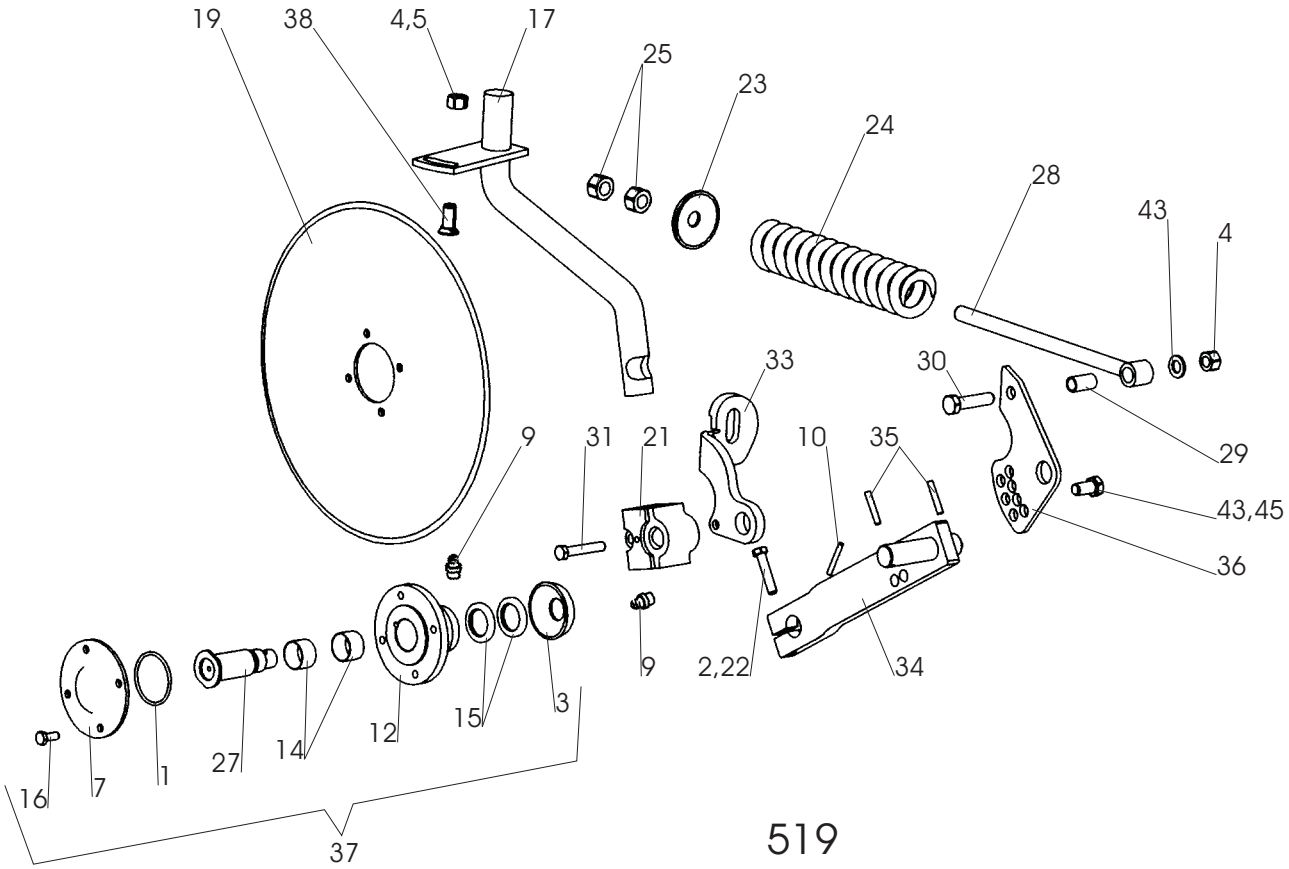
19
38
4,5
17
25
23
24
28
43
4
33
30
9
31
21
10
35
29
43,45
36
9
2,22
34
16
7
1
27
14
12
15
3
37

519

| Pos nr<br>Pos.Nr<br>Ref.No<br>Fig.Nº. | Detalj nr<br>Best.Nr<br>Part No<br>Code Nº. | | Benämning | Bezeichnung | Description | Description |
|---|---|---|---|---|---|---|
| **519** | | | **SKIVRIST** | **SCHEIBENSECH** | **DISC COULTER** | **COUTRE CIRCULAIRE** |
| | | R= | Höger | Rechts | Right | Droite |
| | | L= | Vänster | Links | Left | Gauche |
| | 1652 55 00 91 | ø450 R | Fjädrande skivrist med arm kompl | Gef. Scheibensech mit Arm kompl. kompl. | Spring-loaded disc coulter with arm compl. | Coutre circulaire a ressort avec bras cpl. |
| | 1652 55 00 92 | ø450 L | Fjädrande skivrist med arm kompl | Gef. Scheibensech mit Arm kompl. kompl. | Spring-loaded disc coulter with arm compl. | Coutre circulaire a ressort avec bras cpl. |
| | 1652 55 00 93 | ø500 R | Fjädrande skivrist med arm kompl | Gef. Scheibensech mit Arm kompl. kompl. | Spring-loaded disc coulter with arm compl. | Coutre circulaire a ressort avec bras cpl. |
| | 1652 55 00 94 | ø500 L | Fjädrande skivrist med arm kompl | Gef. Scheibensech mit Arm kompl. kompl. | Spring-loaded disc coulter with arm compl. | Coutre circulaire a ressort avec bras cpl. |
| | 1652 55 00 95 | ø500 R | Fjädrande skivrist ripplad med arm kompl | Gef. Scheibensech mit Arm kompl. Gewelltes | Spring-loaded disc coulter with arm compl. wavy edge | Coutre circulaire a ressort avec bras cpl. ondule |
| | 1652 55 00 96 | ø500 L | Fjädrande skivrist ripplad med arm kompl | Gef. Scheibensech mit Arm kompl. Gewelltes | Spring-loaded disc coulter with arm compl. wavy edge | Coutre circulaire a ressort avec bras cpl. ondule |
| 1 | 740 48 48 04 | Or 65,09x3,53 | O-ring | O-ring | O-ring | Joint thorique |
| 2 | 725 25 43 51 | M6S 12x55 | Skruv | Schraube | Bolt | Vis |
| 3 | 1658 09 59 00 | | Tätningsbricka | Dishtungsscheibe | Sealing washer | Rondelle |
| 4 | 731 23 24 01 | M6M 16 | Mutter | Mutter | Nut | Ecrou |
| 5 | 1658 58 84 00 | | Bricka | Scheibe | Washer | Rondelle |
| 7 | 1658 09 66 50 | | Lock | Deckel | Cover | Chapeau de |
| 9 | 738 88 20 03 | AM 8x1,25 | Smörjnippel | Schmiernippel | Grease nipple | Graisseur |
| 10 | 721 43 49 01 | FRP 6x50 | Rörpinne | Hohlstift | Tension pin | Goupille cannelÚe |
| 12 | 1658 09 67 50 | | Nav | Nabe | Hub | Moyeu |
| 14 | 1657 55 45 00 | 2 | Nållager | Nadellager | Needle bearing | Coussinet |
| 15 | 740 51 77 00 | A 35x52x7 | Tätningsring | Dichtungsring | Sealing ring | Bague d'usure |
| 16 | 725 24 93 51 | M6S 10x25 | Skruv | Schraube | Bolt | Vis |
| 17 | 1658 97 29 90 | R | Skaft fjädrande | Schaft | Shank | Etanþon de rasette |
| | 1658 97 30 90 | L | Skaft fjädrande | Schaft | Shank | Etanþon de rasette |
| 19 | 1657 25 47 00 | ø450 | Skivristklinga slät | Sechscheibe flach | Coulter disc plain | Disque de coutre plain |
| | 1658 06 62 00 | ø500 | Skivristklinga slät | Sechscheibe flach | Coulter disc plain | Disque de coutre plain |
| | 1658 06 63 00 | ø500 | Skivristklinga ripplad | Sechscheibe Gewellt | Coulter disc disc | Disque de coutre ondule |
| 21 | 1652 52 51 90 | | Lagerkuts | Lager | Bearing | Palier |
| 22 | 734 11 78 01 | BRB 13x24 | Bricka | Scheibe | Washer | Plaquette |
| 23 | 1658 09 61 00 | | Bricka | Scheibe | Washer | Rondelle |
| 24 | 1658 15 29 00 | | Tryckfjäder | Feder | Spring | Ressort |
| 25 | 731 43 26 01 | M6LM 20 | Mutter | Mutter | Nut | Ecrou |
| 27 | 1658 10 76 00 | R | Axeltapp | Welle | Stube axle | Axe |
| | 1658 56 71 00 | L | Axeltapp | Welle | Stube axle | Axe |
| 28 | 1658 54 38 00 | | Dragstång | Zugstange | Draw rod | Barre d'attelage |
| 29 | 1658 62 40 09 | FRP 20x36 | Rörpinne | Hohlstift | Tension pin | Goupille cannelÚe |
| 30 | 725 26 33 81 | M6S 16x65 | Skruv | Schraube | Bolt | Vis |
| 31 | 725 25 45 51 | M6S 12x65 | Skruv | Schraube | Bolt | Vis |
| 33 | 1652 52 50 90 | R | Fjäderhållare | Haltearm | Bracket | Support fixation |
| | 1652 52 52 90 | L | Fjäderhållare | Haltearm | Bracket | Support fixation |
| 34 | 1658 66 39 90 | R | Arm | Arm | Arm | Bras |
| | 1658 66 42 90 | L | Arm | Arm | Arm | Bras |
| 35 | 721 43 84 01 | FRP 8x45 | Rörpinne | Hohlstift | Tension pin | Goupille cannelÚe |
| 36 | 1652 52 49 90 | | Hävarm | Hebelarm | Lever arm | Bras de levier |
| 37 | 1657 59 75 91 | R | Skivristnav kompl | Nabe kompl. | Hub compl. | Moyeu cpl. |
| | 1659 22 37 91 | L | Skivristnav kompl | Nabe kompl. | Hub compl. | Moyeu cpl. |
| 38 | 1650 36 02 33 | MFBK 16x40 | Skruv | Schraube | Bolt | Vis |
| 43 | 734 11 86 01 | BRB 17x30 | Bricka | Scheibe | Washer | Plaquette |
| 45 | 725 26 24 51 | M6S 16x30 | Skruv | Schraube | Bolt | Vis |

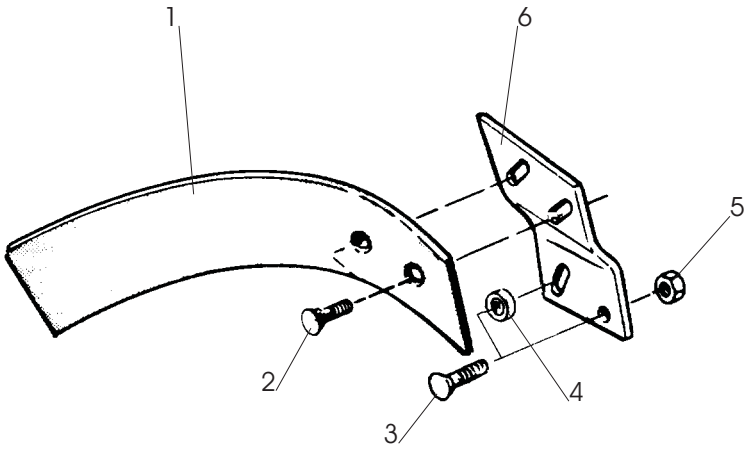


15

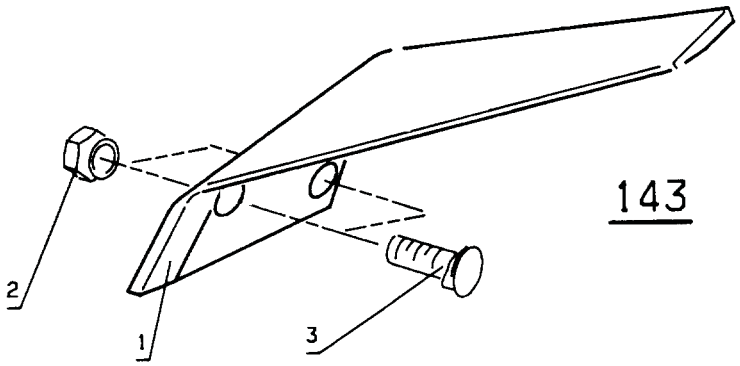


143

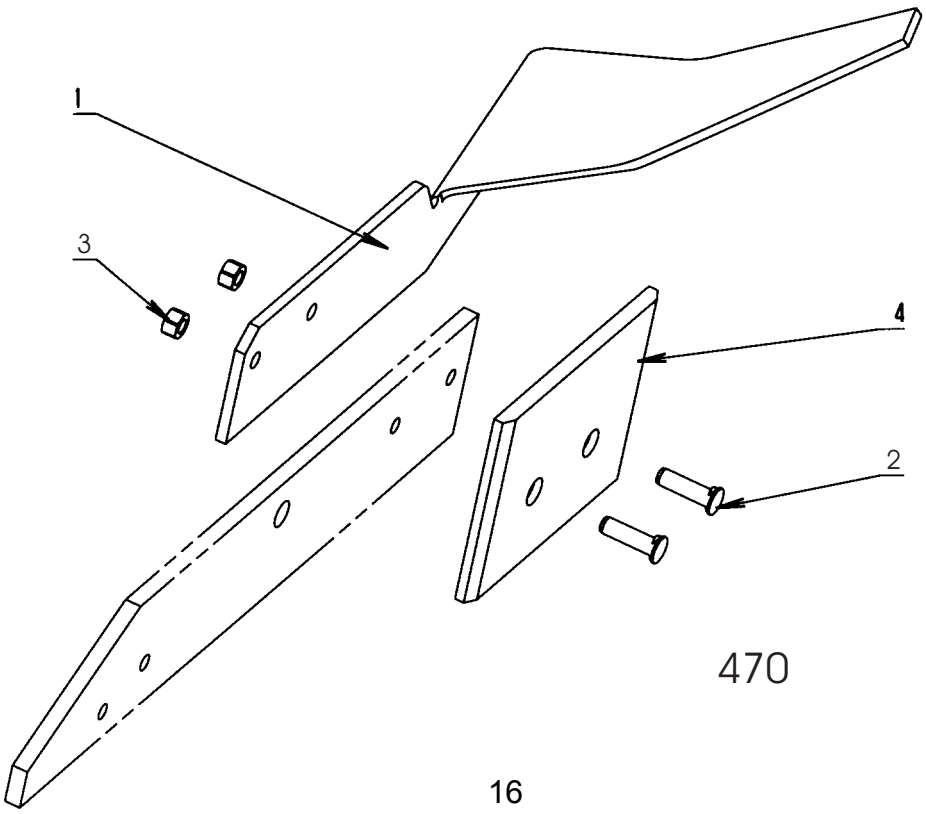


470

| Pos nr<br>Pos.Nr<br>Ref.No<br>Fig.Nº. | Detalj nr<br>Best.Nr<br>Part No<br>Code Nº. | | Benämning | Bezeichnung | Description | Description |
|---|---|---|---|---|---|---|
| **15** | | **XL,XU,XS<br>UC** | **SKUMVINGE** | **EINLEGER-<br>STREICHBLECH** | **COVERBOARD** | **DEFLECTEUR** |
| | | R= | Höger | Rechts | Right | Droite |
| | | L= | Vänster | Links | Left | Gauche |
| | 1659 62 69 50 | L,XL,UC | Skumvinge<br>kompl | Einlegerstreich-<br>blech kompl. | Coverboard<br>compl. | DÚflecteur<br>cpl. |
| | 1659 62 68 50 | R,XL,UC | Skumvinge<br>kompl | Einlegerstreich-<br>blech kompl. | Coverboard<br>compl. | DÚflecteur<br>cpl. |
| | 1652 13 38 50 | L,XU,XS | Skumvinge<br>kompl | Einlegerstreich-<br>blech kompl. | Coverboard<br>compl. | DÚflecteur<br>cpl. |
| | 1652 13 37 50 | R,XU,XS | Skumvinge<br>kompl | Einlegerstreich-<br>blech kompl. | Coverboard<br>compl. | DÚflecteur<br>cpl. |
| 1 | 1659 60 65 50 | L | Skumvinge | Streichblech | Coverboard | DÚflecteur |
| | 1659 60 64 50 | R | Skumvinge | Streichblech | Coverboard | DÚflecteur |
| 2 | 1650 36 02 22 | MFBK 12x35 | Skruv | Schraube | Bolt | Vis |
| 3 | 1650 36 02 23 | MFBK 12x40 | Skruv | Schraube | Bolt | Vis |
| 4 | 1658 94 89 00 | XL,UC | Hylsa | Hülse | Sleeve | Manchon |
| 5 | 1650 36 15 05 | M6M 12 | Flänsmutter | Bundmutter | Collar nut | Ecrou d'accouplem. |
| 6 | 1659 46 25 50 | L,XL,UC | Fäste | Halter | Bracket | Support |
| | 1659 46 24 50 | R,XL,UC | Fäste | Halter | Bracket | Support |
| | 1659 96 28 50 | L,XU,XS | Fäste | Halter | Bracket | Support |
| | 1659 96 27 50 | R,XU,XS | Fäste | Halter | Bracket | Support |
| **143** | | | **FÅR-<br>BREDDARE** | **FURCHEN-<br>MESSER** | **FURROW<br>WIDENING KNIFE** | **COUTEAU POUR<br>PNEUS LARGES** |
| | 1659 56 78 59 | R | Fårbreddare<br>kompl | Furchen-Messer<br>kompl. | Furrow knife<br>compl. | Couteau<br>cpl. |
| | 1659 56 79 59 | L | Fårbreddare<br>kompl | Furchen-Messer<br>kompl. | Furrow knife<br>compl. | Couteau<br>cpl. |
| 1 | 1659 56 78 50 | R | Fårbreddare | Furchen-Messer | Furrow knife | Couteau |
| | 1659 56 79 50 | L | Fårbreddare | Furchen-Messer | Furrow knife | Couteau |
| 2 | 1650 36 13 03 | M6M 12x1,25 | Mutter | Mutter | Nut | Ecrou |
| 3 | 1650 36 12 21 | MFBKF 12x29 | Skruv | Schraube | Bolt | Vis |
| **470** | | | **FÅR-<br>BREDDARE** | **FURCHEN-<br>MESSER** | **FURROW<br>WIDENING KNIFE** | **COUTEAU POUR<br>PNEUS LARGES** |
| | 1652 47 89 00 | R | Fårbreddare<br>kompl | Furchen-Messer<br>kompl. | Furrow knife<br>compl. | Couteau<br>cpl. |
| | 1652 47 90 00 | L | Fårbreddare<br>kompl | Furchen-Messer<br>kompl. | Furrow knife<br>compl. | Couteau<br>cpl. |
| 1 | 1652 38 68 50 | R | Fårbreddare | Furchen-Messer | Furrow knife | Couteau |
| | 1652 38 67 50 | L | Fårbreddare | Furchen-Messer | Furrow knife | Couteau |
| 2 | 1650 36 12 24 | MFBKF 12x45 | Skruv | Schraube | Bolt | Vis |
| 3 | 1650 36 13 03 | M6M 12x1,25 | Mutter | Mutter | Nut | Ecrou |
| 4 | 1659 42 89 00 | | Slitplatta | Verschleissplatte | Wearing plate | Plaque d'usure |

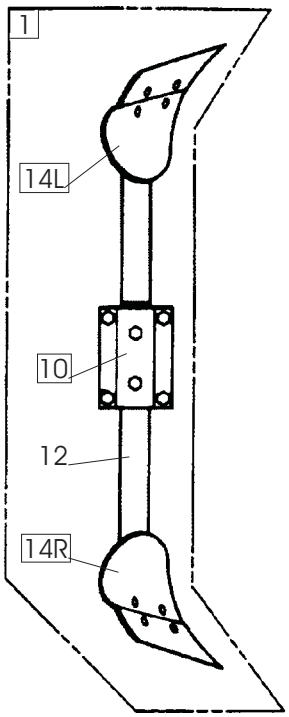
1
14L
10
12
14R

EG, EP, EM

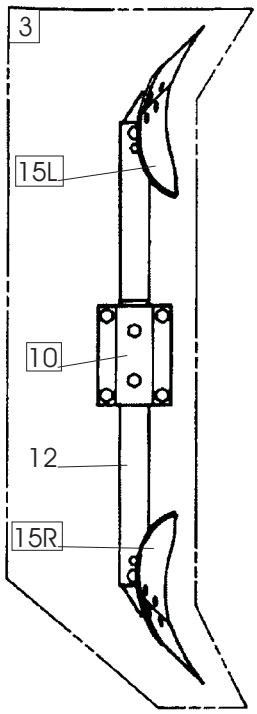
3
15L
10
12
15R

F

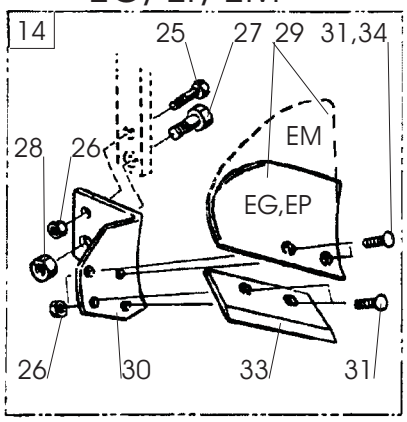
14
25
27
29
31,34
EM
EG,EP
28
26
26
30
33
31

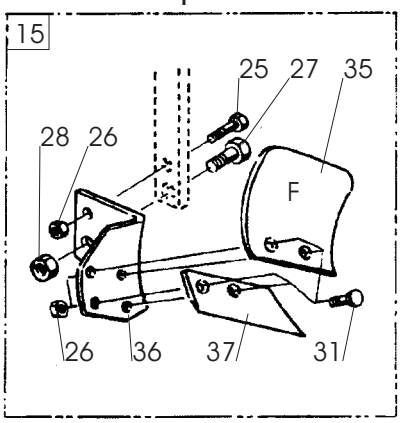
15
25
27
35
28
26
F
26
36
37
31

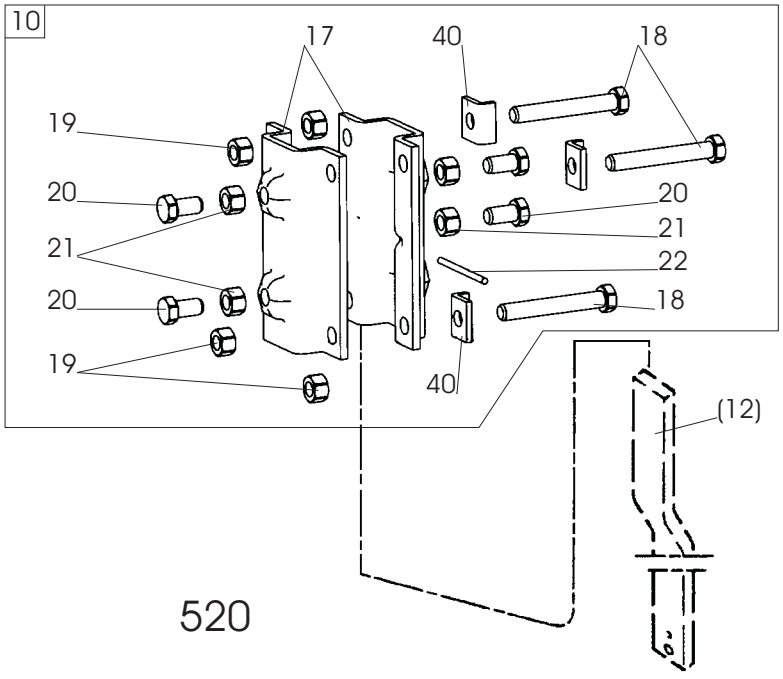
10
17
40
18
19
20
21
20
19
20
21
22
18
40
(12)

520

| Pos nr<br>Pos.Nr<br>Ref.No<br>Fig.Nº. | Detalj nr<br>Best.Nr<br>Part No<br>Code Nº. | | Benämning | Bezeichnung | Description | Description |
|---|---|---|---|---|---|---|
| **520** | | | **SKUMRIST** | **VORSCHÄLER** | **SKIMMER** | **RASETTE** |
| | | R= | Höger | Rechts | Right | Droite |
| | | L= | Vänster | Links | Left | Gauche |
| 1 | 1659 90 51 50 | 80 | EP-rist | Vorschäler typ EP | Skimmer type EP | Rasette type EP |
| | 1652 08 34 50 | 75 | EP-rist | Vorschäler typ EP | Skimmer type EP | Rasette type EP |
| | 1659 82 51 50 | 80 | EG-rist | Vorschäler typ EG | Skimmer type EG | Rasette type EG |
| | 1652 08 31 50 | 75 | EG-rist | Vorschäler typ EG | Skimmer type EG | Rasette type EG |
| | 1652 47 84 50 | 80 | EM-rist | Vorschäler typ EM | Skimmer type EM | Rasette type EM |
| | 1652 47 85 50 | 75 | EM-rist | Vorschäler typ EM | Skimmer type EM | Rasette type EM |
| 3 | 1659 90 35 50 | 80 | F-rist | Vorschäler typ F | Skimmer type F | Rasette type F |
| | 1652 08 32 50 | 75 | F-rist | Vorschäler typ F | Skimmer type F | Rasette type F |
| 10 | 1659 45 46 50 | | Fäste | Haltearm | Bracket | Fixation de rasette |
| 12 | 1652 08 29 50 | L=570 | Skaft | Schaft | Shank | Etançon de rasette |
| | 1659 82 62 50 | L=650 | Skaft | Schaft | Shank | Etançon de rasette |
| 14 | 1659 90 49 50 | R | EP-rist | Vorschäler typ EP | Skimmer type EP | Rasette type EP |
| | 1659 90 50 50 | L | EP-rist | Vorschäler typ EP | Skimmer type EP | Rasette type EP |
| | 1659 82 60 50 | R | EG-rist | Vorschäler typ EG | Skimmer type EG | Rasette type EG |
| | 1659 82 61 50 | L | EG-rist | Vorschäler typ EG | Skimmer type EG | Rasette type EG |
| | 1652 44 23 50 | R | EM-rist | Vorschäler typ EM | Skimmer type EM | Rasette type EM |
| | 1652 44 24 50 | L | EM-rist | Vorschäler typ EM | Skimmer type EM | Rasette type EM |
| 15 | 1659 90 33 50 | R | F-rist | Vorschäler typ F | Skimmer type F | Rasette type F |
| | 1659 90 34 50 | L | F-rist | Vorschäler typ F | Skimmer type F | Rasette type F |
| 17 | 1659 44 42 50 | | Fäste | Halter | Bracket | Support |
| 18 | 725 26 42 51 | M6S 16x110 | Skruv | Schraube | Bolt | Vis |
| 19 | 731 23 24 01 | M6M 16 | Mutter | Mutter | Nut | Ecrou |
| 20 | 1659 16 34 00 | | Justerskruv | Einstellschraube | Adjusting screw | Vis reglage |
| 21 | 1650 36 04 05 | M6M 16 | Mutter | Mutter | Nut | Ecrou |
| 22 | 1659 45 45 50 | | Pinne | Stift | Pin | Goupille |
| 24 | 725 26 32 81 | M6S 16x60 | Skruv | Schraube | Bolt | Vis |
| 25 | 1652 03 76 00 | M6S 12x40 | Skruv | Schraube | Bolt | Vis |
| 26 | 731 23 22 01 | M6M 12 | Mutter | Mutter | Nut | Ecrou |
| 27 | 1652 03 77 00 | M6S 16x50 | Skruv | Schraube | Bolt | Vis |
| 28 | 732 21 24 51 | M16 | Låsmutter | Nyloc-Mutter | Lock nut | Ecrou freiné |
| 29 | 1659 18 03 09 | R | EG-vändskiva | EG-Streicblech | EG-Mouldboard | EG-versoir de raset. |
| | 1659 18 04 09 | L | EG-vändskiva | EG-Streicblech | EG-Mouldboard | EG-versoir de raset. |
| | 1659 20 85 09 | R | EP-vändskiva | EP-Streichblech | EP-Mouldbord | EP-versoir de raset. |
| | 1659 20 86 09 | L | EP-vändskiva | EP-Streichblech | EP-Mouldbord | EP-versoir de raset. |
| | 1652 44 21 09 | R | EM-vändskiva | EM-Streichblech | EM-Mouldbord | EM-versoir de raset. |
| | 1652 44 22 09 | L | EM-vändskiva | EM-Streichblech | EM-Mouldbord | EM-versoir de raset. |
| 30 | 1659 82 58 50 | R | EG-EP-EM-ställ | EG-EP-EM-Scharhalter | EG-EP-EM-frog | EG-EP-EM-Sep |
| | 1659 82 59 50 | L | EG-EP-EM-ställ | EG-EP-EM-Scharhalter | EG-EP-EM-frog | EG-EP-EM-Sep |
| 31 | 1650 36 02 21 | MFBK 12x28 | Skruv | Schraube | Bolt | Vis |
| 33 | 1659 18 01 09 | R | EG-EP-EM-skär | EG-EP-EM-Schar | EG-EP-EM-share | EG-EP-EM-vannas |
| | 1659 18 02 09 | L | EG-EP-EM-skär | EG-EP-EM-Schar | EG-EP-EM-share | EG-EP-EM-vannas |
| 34 | 1650 36 02 22 | MFBK 12x35 | Skruv | Schraube | Bolt | Vis |
| 35 | 1659 30 62 00 | R | F-vändskiva | F-Streichblech | F-mouldboard | F-versoir de raset. |
| | 1659 30 61 00 | L | F-vändskiva | F-Streichblech | F-mouldboard | F-versoir de raset. |
| 36 | 1659 90 31 50 | R | F-ställ | F-Rumpf | F-frog | F-sep |
| | 1659 90 32 50 | L | F-ställ | F-Rumpf | F-frog | F-sep |
| 37 | 1659 30 55 09 | R | F-skär | F-Schar | F-shar | F-soc de raset. |
| | 1659 30 54 09 | L | F-skär | F-Schar | F-shar | F-soc de raset. |
| 40 | 1652 00 96 00 | | Låsbricka | Sicherungsscheibe | Lock washer | Rondelle d'arrêt |

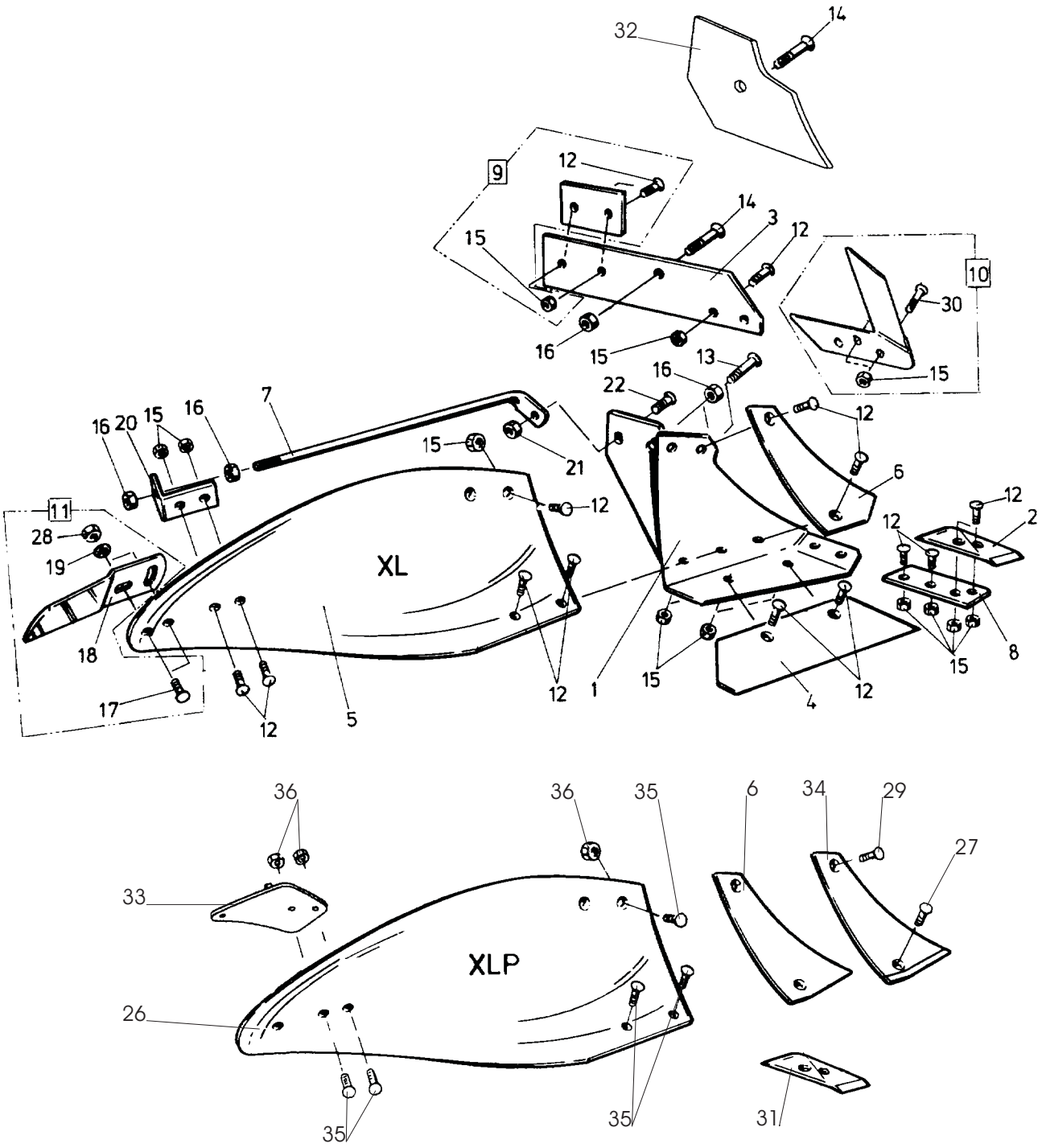


103d

| Pos nr<br>Pos.Nr<br>Ref.No<br>Fig.Nº. | Detalj nr<br>Best.Nr<br>Part No<br>Code Nº. | | Benämning | Bezeichnung | Description | Description |
|---|---|---|---|---|---|---|
| **103d** | | **XL,XLP** | **PLOGKROPP** | **PFLUGKÖRPER** | **PLOUGH BOTTOMS** | **CORPS DE CHARRUE** |
| | | R= | Höger | Rechts | Right | Droite |
| | | L= | Vänster | Links | Left | Gauche |
| 1 | 1659 46 17 90 | L | Ställ | Rumpf | Frog | Sep |
| | 1659 46 16 90 | R | Ställ | Rumpf | Frog | Sep |
| 2 | 1659 46 09 09 | L | Spets | Scharspitze | Share point | Pointe |
| | 1659 46 08 09 | R | Spets | Scharspitze | Share point | Pointe |
| 3 | 1659 46 05 09 | L | Landsida | Landseite | Landside | Contre-sep |
| | 1659 46 04 09 | R | Landsida | Landseite | Landside | Contre-sep |
| 4 | 1659 45 99 09 | 14" L | Skär | Schar | Share | Soc |
| | 1659 45 98 09 | 14" R | Skär | Schar | Share | Soc |
| | 1659 46 01 09 | 16" L | Skär | Schar | Share | Soc |
| | 1659 46 00 09 | 16" R | Skär | Schar | Share | Soc |
| | 1659 46 03 09 | 18" L | Skär | Schar | Share | Soc |
| | 1659 46 02 09 | 18" R | Skär | Schar | Share | Soc |
| 5 | 1659 45 95 99 | XL/L | Vändskiva | Streichblech | Mouldboard | Versoir |
| | 1659 45 94 99 | XL/R | Vändskiva | Streichblech | Mouldboard | Versoir |
| 6 | 1659 45 97 09 | L | Vändskivebröst | Streichblechbrust | Mouldboard shin | Epaulement de versoir |
| | 1659 45 96 09 | R | Vändskivebröst | Streichblechbrust | Mouldboard shin | Epaulement de versoir |
| 7 | 1659 46 14 90 | | Stötta | Haltestrebe | Support stay | Renfort de versoir |
| 8 | 1659 46 13 09 | L | Fäste | Halter | Bracket plate | Plaque de serrage |
| | 1659 46 12 09 | R | Fäste | Halter | Bracket plate | Plaque de serrage |
| 9 | 1659 42 89 09 | | Slitplatta kompl | Verschleissplatte kompl. | Wearing plate compl. | Plaque d'usure cpl. |
| 10 | 1659 46 23 09 | L | Knivrist | Anlagensech | Fin coulter | Coutre aileron |
| | 1659 46 22 09 | R | Knivrist | Anlagensech | Fin coulter | Coutre aileron |
| 11 | 1658 54 62 50 | XL/L | Tiltvinge kompl | Streichschiene kompl. | Mouldboard extens. compl. | Rallonge de versoir cpl. |
| | 1658 54 61 50 | XL/R | Tiltvinge kompl | Streichschiene kompl. | Mouldboard extens. compl. | Rallonge de versoir cpl. |
| 12 | 1650 36 12 21 | MFBKF 12x29 | Skruv | Schraube | Bolt | Vis |
| 13 | 1650 36 02 57 | MFBK 20x60 | Skruv | Schraube | Bolt | Vis |
| 14 | 1650 36 02 58 | MFBK 20x75 | Skruv | Schraube | Bolt | Vis |
| 15 | 1650 36 13 03 | M6M 12x1,25 | Mutter | Mutter | Nut | Ecrou |
| 16 | 1650 36 04 07 | M6M 20 | Mutter | Mutter | Nut | Ecrou |
| 17 | 1650 36 02 23 | MFBK 12x40 | Skruv | Schraube | Bolt | Vis |
| 18 | 1658 05 59 50 | XL/L | Tiltvinge | Streichschiene | Mouldboard extens. | Rallonge de versoir |
| | 1657 49 22 50 | XL/R | Tiltvinge | Streichschiene | Mouldboard extens. | Rallonge de versoir |
| 19 | 734 11 78 01 | BRB 13x24 | Bricka | Scheibe | Washer | Rondelle |
| 20 | 1659 46 15 90 | | Stöttvinkel | Halter | Bracket | Support |
| 21 | 731 23 24 01 | M6M 16 | Mutter | Mutter | Nut | Ecrou |
| 22 | 1650 36 02 33 | MFBK 16x40 | Skruv | Schraube | Bolt | Vis |
| 26 | 1652 48 04 09 | XLP/L | Plastvändskiva | Streichblech Kunststoff | Mouldboard plastic | Versoir plastique |
| | 1652 48 03 09 | XLP/R | Plastvändskiva | Streichblech Kunststoff | Mouldboard plastic | Versoir plastique |
| 27 | 1650 36 02 22 | MFBK 12x35 | Skruv | Schraube | Bolt | Vis |
| 29 | 1650 36 01 25 | MFBF 12x50 | Skruv | Schraube | Bolt | Vis |
| 30 | 1650 36 12 24 | MFBKF 12x45 | Skruv | Schraube | Bolt | Vis |
| 31 | 1659 62 73 09 | L | Spets special | Scharspitze spezial | Share point special | Pointe spécial |
| | 1659 62 72 09 | R | Spets special | Scharspitze spezial | Share point special | Pointe spécial |
| 32 | 1652 39 24 09 | R | Täckplåt | Deckblech | Covering plate | Plaque de recouvrement |
| | 1652 39 25 09 | L | Täckplåt | Deckblech | Covering plate | Plaque de recouvrement |
| 33 | 1652 43 67 50 | R | Stöttvinkel | Halter | Bracket | Support |
| | 1652 47 97 50 | L | Stöttvinkel | Halter | Bracket | Support |
| 34 | 1652 48 01 50 | R | Vändskivebröst fas | Streichblechbrust | Mouldboard shin | Epaulement de |
| | 1652 48 02 50 | L | Vändskivebröst fas | Streichblechbrust | Mouldboard shin | Epaulement de |

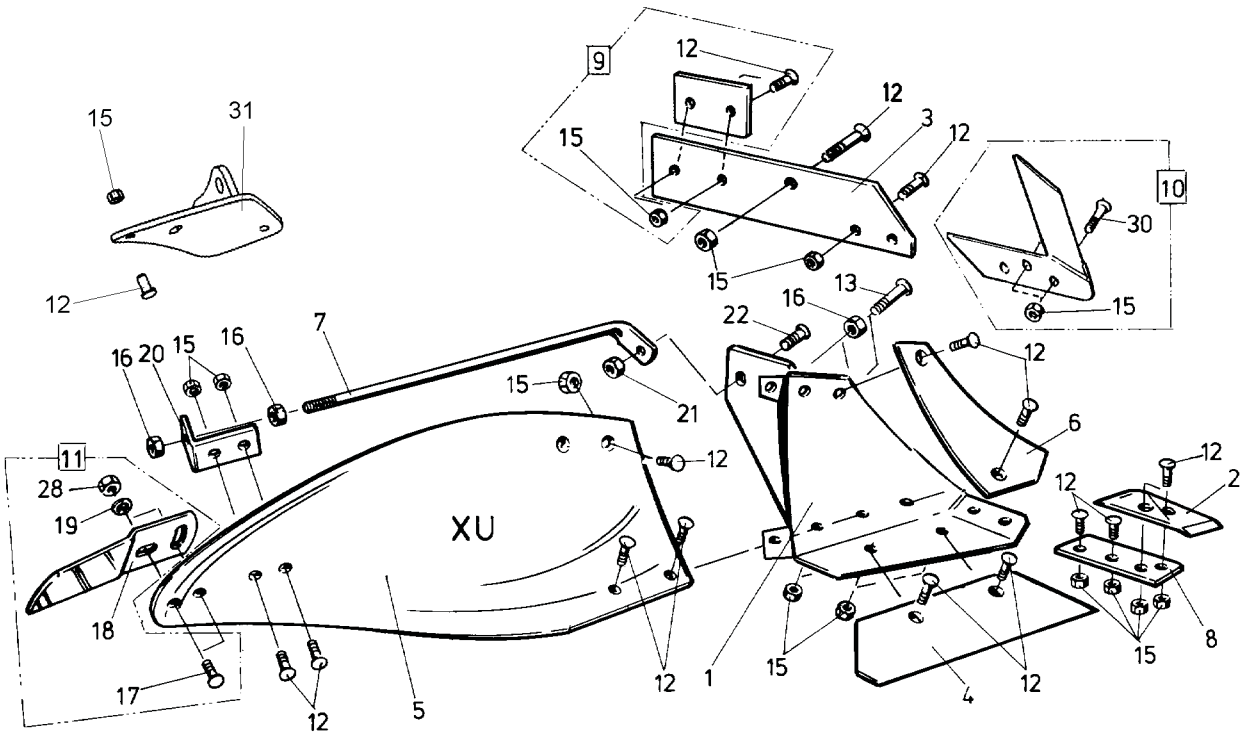

9
12
12
3
12
15
15
10
30
15
15
31
12
13
16
22
12
7
16
20
15
16
15
21
6
12
11
28
19
XU
12
12
2
18
17
12
5
12
1
15
4
12
15
8


182

| Pos nr<br>Pos.Nr<br>Ref.No<br>Fig.Nº. | Detalj nr<br>Best.Nr<br>Part No<br>Code Nº. | | Benämning | Bezeichnung | Description | Description |
|---|---|---|---|---|---|---|
| **182** | | **XU** | **PLOGKROPP** | **PFLUGKÖRPER** | **PLOUGH BOTTOMS** | **CORPS DE CHARRUE** |
| | | R= | Höger | Rechts | Right | Droite |
| | | L= | Vänster | Links | Left | Gauche |
| 1 | 1652 05 40 90 | L | Ställ | Rumpf | Frog | Sep |
| | 1652 05 39 90 | R | Ställ | Rumpf | Frog | Sep |
| 2 | 1659 46 09 09 | L | Spets | Scharspitze | Share point | Pointe |
| | 1659 46 08 09 | R | Spets | Scharspitze | Share point | Pointe |
| 3 | 1659 60 95 09 | L | Landsida | Landseite | Landside | Contre-sep |
| | 1659 60 94 09 | R | Landsida | Landseite | Landside | Contre-sep |
| 4 | 1659 60 91 09 | 16" L | Skär | Schar | Share | Soc |
| | 1659 60 90 09 | 16" R | Skär | Schar | Share | Soc |
| | 1659 60 93 09 | 18" L | Skär | Schar | Share | Soc |
| | 1659 60 92 09 | 18" R | Skär | Schar | Share | Soc |
| 5 | 1659 60 85 99 | XU/L | Vändskiva | Streichblech | Mouldboard | Versoir |
| | 1659 60 84 99 | XU/R | Vändskiva | Streichblech | Mouldboard | Versoir |
| 6 | 1659 60 87 09 | L | Vändskivebröst | Streichblechbrust | Mouldboard shin | Epaulement de versoir |
| | 1659 60 86 09 | R | Vändskivebröst | Streichblechbrust | Mouldboard shin | Epaulement de versoir |
| 7 | 1659 61 04 90 | | Stötta | Haltestrebe | Support stay | Renfort de versoir |
| 8 | 1659 46 13 09 | L | Fäste | Halter | Bracket plate | Plaque de serrage |
| | 1659 46 12 09 | R | Fäste | Halter | Bracket plate | Plaque de serrage |
| 9 | 1659 42 89 09 | | Slitplatta kompl | Verschleissplatte kompl. | Wearing plate compl. | Plaque d'usure cpl. |
| 10 | 1659 46 23 99 | L | Knivrist | Anlagensech | Fin coulter | Coutre aileron |
| | 1659 46 22 99 | R | Knivrist | Anlagensech | Fin coulter | Coutre aileron |
| 11 | 1658 54 62 50 | XU/L | Tiltvinge kompl | Streichschiene kompl. | Mouldboard extens. compl. | Rallonge de versoir cpl. |
| | 1658 54 61 50 | XU/R | Tiltvinge kompl | Streichschiene kompl. | Mouldboard extens. compl. | Rallonge de versoir cpl. |
| 12 | 1650 36 12 21 | MFBKF 12x29 | Skruv | Schraube | Bolt | Vis |
| 13 | 1650 36 02 57 | MFBK 20x60 | Skruv | Schraube | Bolt | Vis |
| 15 | 1650 36 13 03 | M6M 12x1,25 | Mutter | Mutter | Nut | Ecrou |
| 16 | 1650 36 04 07 | M6M 20 | Mutter | Mutter | Nut | Ecrou |
| 17 | 1650 36 02 23 | MFBK 12x40 | Skruv | Schraube | Bolt | Vis |
| 18 | 1658 05 59 50 | XU/L | Tiltvinge | Streichschiene | Mouldboard extens. | Rallonge de versoir |
| | 1657 49 22 50 | XU/R | Tiltvinge | Streichschiene | Mouldboard extens. | Rallonge de versoir |
| 19 | 734 11 78 01 | BRB 13x24 | Bricka | Scheibe | Washer | Rondelle |
| 20 | 1659 46 15 90 | | Stöttvinkel | Halter | Bracket | Support |
| 21 | 731 23 24 01 | M6M 16 | Mutter | Mutter | Nut | Ecrou |
| 22 | 1650 36 02 33 | MFBK 16x40 | Skruv | Schraube | Bolt | Vis |
| 28 | 1650 36 04 03 | M6M 12 | Mutter | Mutter | Nut | Ecrou |
| 30 | 1650 36 12 24 | MFBKF 12x45 | Skruv | Schraube | Bolt | Vis |
| 31 | 1652 42 62 50 | L | Vinkelstötta | Halter | Bracket | Support |
| | 1652 42 60 50 | R | Vinkelstötta | Halter | Bracket | Support |

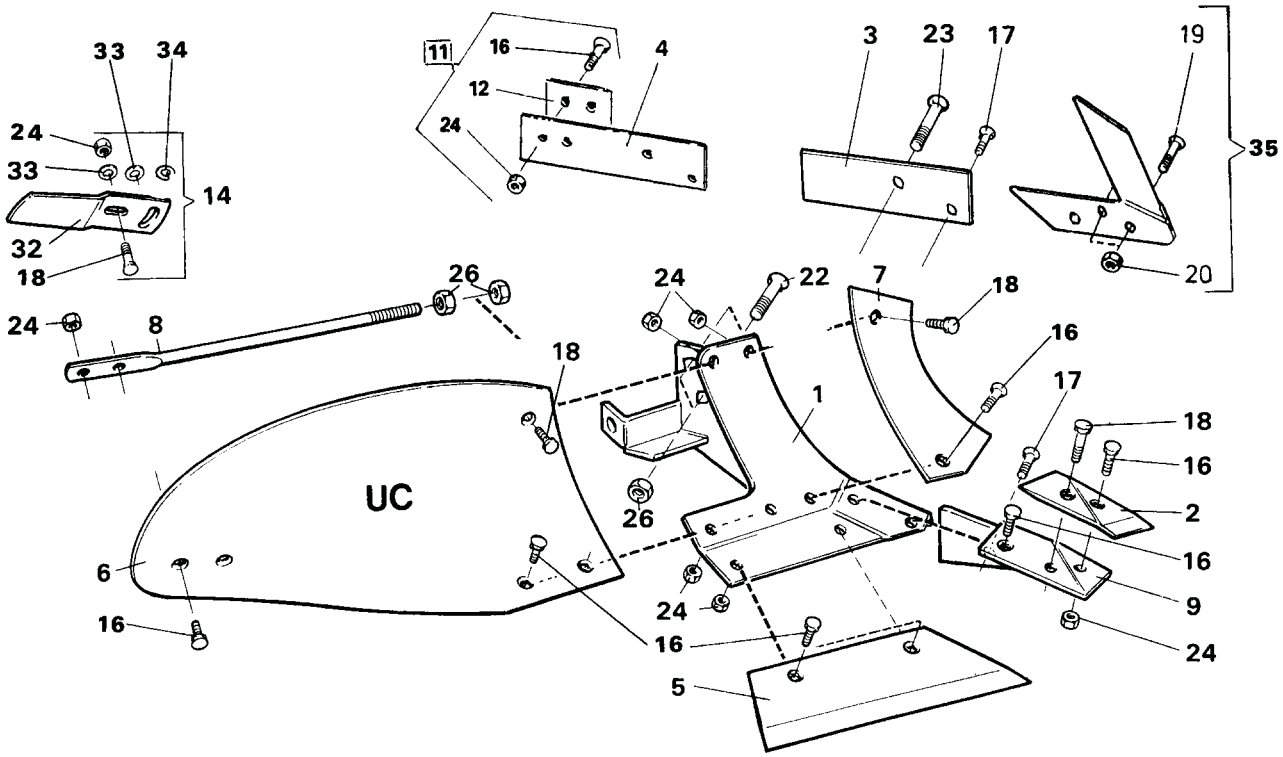
33
34
24
33
14
32
18
11
16
4
12
24
3
23
17
19
35
20
24
8
26
24
22
7
18
16
17
18
16
2
16
9
24
18
1
26
UC
6
16
16
24
16
5

**16** d

| Pos nr<br>Pos.Nr<br>Ref.No<br>Fig.Nº. | Detalj nr<br>Best.Nr<br>Part No<br>Code Nº. | | Benämning | Bezeichnung | Description | Description |
|---|---|---|---|---|---|---|
| **16d** | | **UC** | **PLOGKROPP** | **PFLUGKÖRPER** | **PLOUGH BOTTOMS** | **CORPS DE CHARRUE** |
| | | R= | Höger | Rechts | Right | Droite |
| | | L= | Vänster | Links | Left | Gauche |
| 1 | 1658 40 91 90 | L | Ställ | Rumpf | Frog | Sep |
| | 1658 40 90 90 | R | Ställ | Rumpf | Frog | Sep |
| 2 | 1659 22 07 09 | L (85 143) | Spets | Scharspitze | Share point | Pointe |
| | 1659 22 06 09 | R (84 060) | Spets | Scharspitze | Share point | Pointe |
| 3 | 1658 51 96 09 | L | Landsida kort | Landseite kurz | Landside short | Contre-sep court |
| | 1658 39 81 09 | R | Landsida kort | Landseite kurz | Landside short | Contre-sep court |
| 4 | 1659 42 87 09 | L | Landsida lång | Landseite lang | Landside long | Contre-sep long |
| | 1659 42 86 09 | R | Landsida lång | Landseite lang | Landside long | Contre-sep long |
| 5 | 1658 51 93 09 | 12" L | Skär | Schar | Share | Soc |
| | 1658 50 03 09 | 12" R | Skär | Schar | Share | Soc |
| | 1658 51 94 09 | 14" L | Skär | Schar | Share | Soc |
| | 1658 50 04 09 | 14" R | Skär | Schar | Share | Soc |
| | 1658 51 95 09 | 16" L | Skär | Schar | Share | Soc |
| | 1658 50 39 09 | 16" R | Skär | Schar | Share | Soc |
| 6 | 1658 40 87 99 | UC/L | Vändskiva | Streichblech | Mouldboard | Versoir |
| | 1658 40 31 99 | UC/R | Vändskiva | Streichblech | Mouldboard | Versoir |
| 7 | 1658 40 82 09 | L | Vändskivebröst | Streichblechbrust | Mouldboard shin | Epaulement de versoir |
| | 1658 40 33 09 | R | Vändskivebröst | Streichblechbrust | Mouldboard shin | Epaulement de versoir |
| 8 | 1658 60 06 90 | UC | Stötta | Haltestrebe | Support stay | Renfort de versoir |
| 9 | 1658 51 91 09 | L | Fäste | Halter | Bracket plate | Plaque de serrage |
| | 1658 49 58 09 | R | Fäste | Halter | Bracket plate | Plaque de serrage |
| 11 | 1659 42 89 09 | | Slitplatta kompl | Verschleissplatte kompl. | Wearing plate compl. | Plaque d'usure cpl. |
| 12 | 1659 42 89 00 | | Slitplatta | Verschleissplatte | Wearing plate | Plaque d'usure |
| 14 | 1658 54 62 50 | V/L | Tiltvinge kompl | Streichschiene kompl. | Mouldboard extens. compl. | Rallonge de versoir cpl. |
| | 1658 54 61 50 | V/R | Tiltvinge kompl | Streichschiene kompl. | Mouldboard extenx. compl. | Rallonge de versoir cpl. |
| 16 | 1650 36 02 21 | MFBK 12x28 | Skruv | Schraube | Bolt | Vis |
| 17 | 1650 36 02 22 | MFBK 12x35 | Skruv | Schraube | Bolt | Vis |
| 18 | 1650 36 02 23 | MFBK 12x40 | Skruv | Schraube | Bolt | Vis |
| 19 | 1650 36 12 24 | MFBKF 12x45 | Skruv | Schraube | Bolt | Vis |
| 20 | 1650 36 13 03 | M6M 12x1,25 | Mutter | Mutter | Nut | Ecrou |
| 22 | 1650 36 02 57 | MFBK 20x60 | Skruv | Schraube | Bolt | Vis |
| 23 | 1650 36 02 58 | MFBK 20x75 | Skruv | Schraube | Bolt | Vis |
| 24 | 731 23 22 01 | M6M 12 | Mutter | Mutter | Nut | Ecrou |
| 26 | 1650 36 04 07 | M6M 20 | Mutter | Mutter | Nut | Ecrou |
| 32 | 1657 49 22 50 | V/R | Tiltvinge | Streichschiene | Mouldboard extens. | Rallonge de versoir |
| | 1658 05 59 50 | V/L | Tiltvinge | Streichschiene | Mouldboard extens. | Rallonge de versoir |
| 33 | 734 11 78 01 | BRB 13x24 | Bricka | Scheibe | Washer | Rondelle |
| 34 | 1658 66 21 00 | | Bricka | Scheibe | Washer | Rondelle |
| 35 | 1659 46 22 09 | R | Knivrist kompl | Anlagensech kompl. | Fin coulter compl. | Coutre aileron cpl. |
| | 1659 46 23 09 | L | Knivrist kompl | Anlagensech kompl. | Fin coulter compl. | Coutre aileron cpl. |

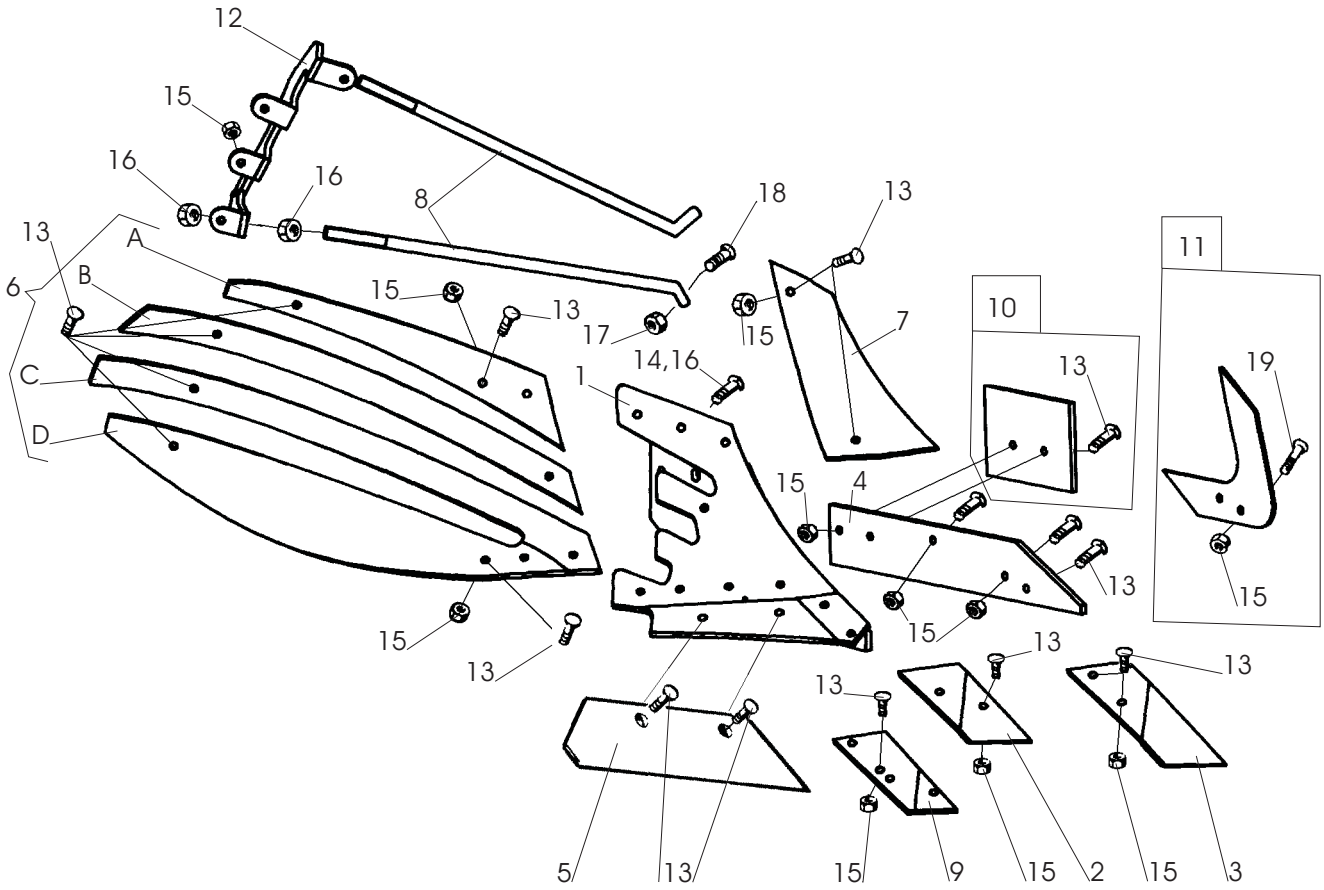
12
15
16
16
8
18
13
13
A
6
B
15
13
17
15
7
10
11
14,16
1
13
19
C
D
15
4
13
15
15
13
13
13
13
5
13
15
9
15
2
15
3

290

| Pos nr<br>Pos.Nr<br>Ref.No<br>Fig.Nº. | Detalj nr<br>Best.Nr<br>Part No<br>Code Nº. | | Benämning | Bezeichnung | Description | Description |
|---|---|---|---|---|---|---|
| **290** | | **XS** | **PLOGKROPP** | **PFLUGKÖRPER** | **PLOUGH BOTTOMS** | **CORPS DE CHARRUE** |
| | | R= | Höger | Rechts | Right | Droite |
| | | L= | Vänster | Links | Left | Gauche |
| 1 | 1652 16 20 90 | L | Ställ | Rumpf | Frog | Sep |
| | 1652 16 19 90 | R | Ställ | Rumpf | Frog | Sep |
| 2 | 1659 46 09 09 | L | Spets | Scharspitze | Share point | Pointe |
| | 1659 46 08 09 | R | Spets | Scharspitze | Share point | Pointe |
| 3 | 1659 62 73 09 | L | Spets nedsänkt | Scharspitze | Share point | Pointe |
| | 1659 62 72 09 | R | Spets nedsänkt | Scharspitze | Share point | Pointe |
| 4 | 1659 60 95 09 | L | Landsida | Landseite | Landside | Contre-sep |
| | 1659 60 94 09 | R | Landsida | Landseite | Landside | Contre-sep |
| 5 | 1659 60 91 09 | 16" L | Skär | Schar | Share | Soc |
| | 1659 60 90 09 | 16" R | Skär | Schar | Share | Soc |
| | 1659 60 93 09 | 18" L | Skär | Schar | Share | Soc |
| | 1659 60 92 09 | 18" R | Skär | Schar | Share | Soc |
| 6 | 1652 02 77 99 | XS/L | Vändskiva | Streichblech | Mouldboard | Versoir |
| | 1652 02 48 99 | XS/R | Vändskiva | Streichblech | Mouldboard | Versoir |
| | | | (Pos.nr A,B,C,D) | (Pos.Nr A,B,C,D) | (Ref.No.A,B,C,D) | (Fig.No.A,B,C,D) |
| | | | (Pos.nr A,B,C,D) | (Pos.Nr A,B,C,D) | (Ref.No.A,B,C,D) | (Fig.No.A,B,C,D) |
| A | 1652 02 49 59 | R | Strimla A | Streifen A | Stripe A | Bande A |
| | 1652 08 94 59 | L | Strimla A | Streifen A | Stripe A | Bande A |
| B | 1652 02 50 59 | R | Strimla B | Streifen B | Stripe B | Bande B |
| | 1652 08 95 59 | L | Strimla B | Streifen B | Stripe B | Bande B |
| C | 1652 02 51 59 | R | Strimla C | Streifen C | Stripe C | Bande C |
| | 1652 08 96 59 | L | Strimla C | Streifen C | Stripe C | Bande C |
| D | 1652 02 52 59 | R | Strimla D | Streifen D | Stripe D | Bande D |
| | 1652 08 97 59 | L | Strimla D | Streifen D | Stripe D | Bande D |
| 7 | 1652 15 99 09 | L | Vändskivebröst | Streichblechbrust | Mouldboard shin | Epaulement de versoir |
| | 1652 14 70 09 | R | Vändskivebröst | Streichblechbrust | Mouldboard shin | Epaulement de versoir |
| 8 | 1659 61 04 90 | | Stötta | Haltestrebe | Support stay | Renfort de versoir |
| 9 | 1659 46 13 09 | L | Fäste | Halter | Bracket plate | Plaque de serrage |
| | 1659 46 12 09 | R | Fäste | Halter | Bracket plate | Plaque de serrage |
| 10 | 1659 42 89 09 | | Slitplatta kompl | Verschleissplatte kompl. | Wearing plate compl. | Plaque d'usure cpl. |
| 11 | 1659 46 23 99 | L | Knivrist | Anlagensech | Fin coulter | Coutre aileron |
| | 1659 46 22 99 | R | Knivrist | Anlagensech | Fin coulter | Coutre aileron |
| 12 | 1652 02 68 50 | R | Brygga | Brücke | Bridge | Pont |
| | 1652 02 78 50 | L | Brygga | Brücke | Bridge | Pont |
| 13 | 1650 36 12 21 | MFBKF 12x29 | Skruv | Schraube | Bolt | Vis |
| 14 | 1650 36 02 57 | MFBK 20x60 | Skruv | Schraube | Bolt | Vis |
| 15 | 1650 36 13 03 | M6M 12x1,25 | Mutter | Mutter | Nut | Ecrou |
| 16 | 731 23 26 01 | M6M 20 | Mutter | Mutter | Nut | Ecrou |
| 17 | 731 23 24 01 | M6M 16 | Mutter | Mutter | Nut | Ecrou |
| 18 | 1650 36 02 33 | MFBK 16x40 | Skruv | Schraube | Bolt | Vis |
| 19 | 1650 36 12 24 | MFBKF 12x45 | Skruv | Schraube | Bolt | Vis |

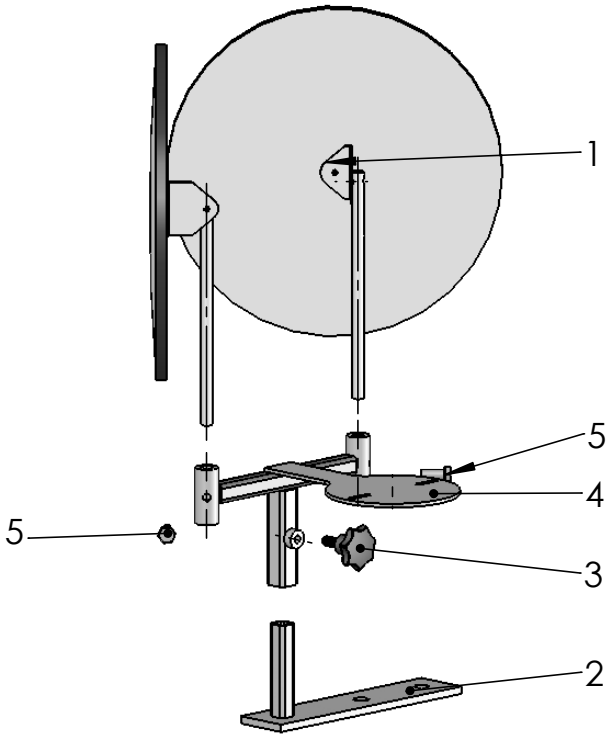


527

| Pos nr<br>Pos.Nr<br>Ref.No<br>Fig.Nº. | Detalj nr<br>Best.Nr<br>Part No<br>Code Nº. | | Benämning | Bezeichnung | Description | Description |
|---|---|---|---|---|---|---|
| **527** | | | **SPEGEL** | **SPIEGEL** | **MIRROR** | **MIROIR** |
| 1 | 1652 63 32 00 | | Spegel | Spiegel | Mirror | Miroir |
| 2 | 1652 63 35 00 | | Rampfäste | Befestigung | Mounting | Attache |
| 3 | 1652 63 31 00 | | Stjärnvred | Handgriff | Knob | Bouton |
| 4 | 1652 63 39 00 | | Fäste | Halter | Bracket | Support |
| 5 | 725 24 93 51 | M6S 10x25 | Skruv | Schraube | Bolt | Vis |

***NUMMER REGISTER*NUMMERNVERZEICHNIS*NUMBER REGISTER*LISTE DE PIECIES PAR ORDRE NUMMERIQUE***


| Detalj nr<br>Best.Nr<br>Part No<br>Code Nº. | Sida<br>Seite<br>Page<br>Page | Pos.nr<br>Pos.Nr<br>Ref.No.<br>Fig.Nº. | Detalj nr<br>Best.Nr<br>Part No<br>Code Nº. | Sida<br>Seite<br>Page<br>Page | Pos.nr<br>Pos.Nr<br>Ref.No.<br>Fig.Nº. | Detalj nr<br>Best.Nr<br>Part No<br>Code Nº. | Sida<br>Seite<br>Page<br>Page | Pos.nr<br>Pos.Nr<br>Ref.No.<br>Fig.Nº. |
|---|---|---|---|---|---|---|---|---|
| 721 42 62 01 | 9 | 14 | 738 22 06 19 | 13 | 43 | 1652 02 68 50 | 27 | 12 |
| 721 42 62 01 | 13 | 8 | 738 23 05 34 | 13 | 44 | 1652 02 77 99 | 27 | 6 |
| 721 43 15 01 | 9 | 15 | 738 61 32 02 | 13 | 38 | 1652 02 78 50 | 27 | |
| 721 43 18 01 | 9 | 19 | 738 88 20 01 | 5 | 8 | 1652 03 76 00 | 19 | 25 |
| 721 43 47 01 | 7 | 66 | 738 88 20 02 | 3 | 14 | 1652 03 77 00 | 19 | 27 |
| 721 43 47 01 | 9 | 32 | 738 88 20 03 | 7 | 9 | 1652 05 39 90 | 23 | |
| 721 43 49 01 | 15 | 10 | 738 88 20 03 | 9 | 16 | 1652 05 40 90 | 23 | 1 |
| 721 43 84 01 | 7 | 62 | 738 88 20 03 | 13 | 41 | 1652 06 20 00 | 13 | 32 |
| 721 43 84 01 | 15 | 35 | 738 88 20 03 | 15 | 9 | 1652 06 22 00 | 13 | 36 |
| 721 43 85 01 | 9 | 18 | 738 88 50 03 | 7 | 15 | 1652 06 23 00 | 13 | 35 |
| 721 44 23 01 | 7 | 14 | 740 43 07 00 | 3 | 18 | 1652 08 29 50 | 19 | 12 |
| 721 45 80 01 | 7 | 8 | 740 48 48 04 | 15 | 1 | 1652 08 31 50 | 19 | |
| 725 23 76 51 | 11 | 26 | 740 51 77 00 | 15 | 15 | 1652 08 32 50 | 19 | |
| 725 24 93 51 | 13 | 18 | 1650 36 01 25 | 21 | 29 | 1652 08 34 50 | 19 | |
| 725 24 93 51 | 15 | 16 | 1650 36 02 21 | 19 | 31 | 1652 08 94 59 | 27 | |
| 725 24 93 51 | 29 | 5 | 1650 36 02 21 | 25 | 16 | 1652 08 95 59 | 27 | |
| 725 25 01 51 | 7 | 24 | 1650 36 02 22 | 17 | 2 | 1652 08 96 59 | 27 | |
| 725 25 09 51 | 13 | 10 | 1650 36 02 22 | 19 | 34 | 1652 08 97 59 | 27 | |
| 725 25 34 51 | 7 | 56 | 1650 36 02 22 | 21 | 27 | 1652 10 43 00 | 5 | 7 |
| 725 25 38 51 | 7 | 60 | 1650 36 02 22 | 25 | 17 | 1652 12 50 00 | 13 | 34 |
| 725 25 43 51 | 15 | 2 | 1650 36 02 23 | 17 | 3 | 1652 12 51 00 | 13 | 33 |
| 725 25 45 51 | 15 | 31 | 1650 36 02 23 | 21 | 17 | 1652 12 67 00 | 13 | 29 |
| 725 25 50 51 | 11 | 5 | 1650 36 02 23 | 23 | 17 | 1652 13 37 50 | 17 | |
| 725 26 24 51 | 15 | 45 | 1650 36 02 23 | 25 | 18 | 1652 13 38 50 | 17 | |
| 725 26 32 81 | 19 | 24 | 1650 36 02 33 | 15 | 38 | 1652 14 70 09 | 27 | |
| 725 26 33 81 | 15 | 30 | 1650 36 02 33 | 21 | 22 | 1652 15 50 50 | 9 | 9 |
| 725 26 36 81 | 7 | 17 | 1650 36 02 33 | 23 | 22 | 1652 15 50 50 | 9a | |
| 725 26 36 81 | 13 | 23 | 1650 36 02 33 | 27 | 18 | 1652 15 51 50 | 9a | 3 |
| 725 26 42 51 | 19 | 18 | 1650 36 02 57 | 21 | 13 | 1652 15 55 90 | 9 | |
| 725 26 53 81 | 7 | 52 | 1650 36 02 57 | 23 | 13 | 1652 15 99 09 | 27 | 7 |
| 725 26 53 81 | 13 | 1 | 1650 36 02 57 | 25 | 22 | 1652 16 19 90 | 27 | |
| 725 26 74 81 | 9 | 29 | 1650 36 02 57 | 27 | 14 | 1652 16 20 90 | 27 | 1 |
| 725 26 75 51 | 5 | 6 | 1650 36 02 58 | 21 | 14 | 1652 22 43 60 | 9 | 28 |
| 725 26 88 81 | 7 | 28 | 1650 36 02 58 | 25 | 23 | 1652 26 37 00 | 13 | 19 |
| 725 26 90 51 | 7 | 39 | 1650 36 04 03 | 23 | 28 | 1652 26 38 00 | 13 | 48 |
| 725 27 07 81 | 7 | 31 | 1650 36 04 05 | 7 | 18 | 1652 26 51 00 | 13 | 28 |
| 725 54 69 91 | 3 | 32 | 1650 36 04 05 | 13 | 2 | 1652 26 52 00 | 13 | 27 |
| 731 23 22 01 | 11 | 6 | 1650 36 04 05 | 19 | 21 | 1652 26 53 00 | 13 | 26 |
| 731 23 22 01 | 19 | 26 | 1650 36 04 07 | 21 | 16 | 1652 30 48 00 | 11 | |
| 731 23 22 01 | 25 | 24 | 1650 36 04 07 | 23 | 16 | 1652 33 39 00 | 5 | 4 |
| 731 23 24 01 | 15 | 4 | 1650 36 04 07 | 25 | 26 | 1652 35 89 00 | 5 | 8 |
| 731 23 24 01 | 19 | 19 | 1650 36 07 05 | 9 | 11 | 1652 37 67 00 | 13 | 14 |
| 731 23 24 01 | 21 | 21 | 1650 36 07 07 | 9 | 21 | 1652 38 02 50 | 9a | 2 |
| 731 23 24 01 | 23 | 21 | 1650 36 12 21 | 17 | 3 | 1652 38 67 50 | 17 | |
| 731 23 24 01 | 27 | 17 | 1650 36 12 21 | 21 | 12 | 1652 38 68 50 | 17 | 1 |
| 731 23 26 01 | 27 | 16 | 1650 36 12 21 | 23 | 12 | 1652 38 71 00 | 13 | 31 |
| 731 23 26 51 | 9 | 27 | 1650 36 12 21 | 27 | 13 | 1652 38 72 00 | 13 | 30 |
| 731 43 26 01 | 7 | 41 | 1650 36 12 24 | 17 | 2 | 1652 39 24 09 | 21 | 32 |
| 731 43 26 01 | 15 | 25 | 1650 36 12 24 | 21 | 30 | 1652 39 25 09 | 21 | |
| 731 43 28 01 | 7 | 35 | 1650 36 12 24 | 23 | 30 | 1652 39 84 00 | 13 | 40 |
| 732 21 20 51 | 13 | 11 | 1650 36 12 24 | 25 | 19 | 1652 40 10 00 | 13 | 6 |
| 732 21 24 51 | 13 | 49 | 1650 36 12 24 | 27 | 19 | 1652 42 60 50 | 23 | |
| 732 21 24 51 | 19 | 28 | 1650 36 13 03 | 17 | 2 | 1652 42 62 50 | 23 | 31 |
| 732 21 26 51 | 7 | 38 | 1650 36 13 03 | 17 | 3 | 1652 43 67 50 | 21 | 33 |
| 734 11 73 01 | 13 | 9 | 1650 36 13 03 | 21 | 15 | 1652 44 21 09 | 19 | |
| 734 11 78 01 | 15 | 22 | 1650 36 13 03 | 23 | 15 | 1652 44 22 09 | 19 | |
| 734 11 78 01 | 21 | 19 | 1650 36 13 03 | 25 | 20 | 1652 44 23 50 | 19 | |
| 734 11 78 01 | 23 | 19 | 1650 36 13 03 | 27 | 15 | 1652 44 24 50 | 19 | |
| 734 11 78 01 | 25 | 33 | 1650 36 15 05 | 17 | 5 | 1652 47 84 50 | 19 | |
| 734 11 86 01 | 7 | 53 | 1650 36 50 07 | 7 | 30 | 1652 47 85 50 | 19 | |
| 734 11 86 01 | 13 | 3 | 1650 36 50 07 | 9 | 12 | 1652 47 89 00 | 17 | |
| 734 11 86 01 | 15 | 43 | 1651 29 83 01 | 5 | 6 | 1652 47 90 00 | 17 | |
| 734 11 92 01 | 7 | 29 | 1651 42 91 00 | 11 | 4 | 1652 47 97 50 | 21 | |
| 734 11 92 01 | 9 | 17 | 1652 00 96 00 | 19 | 40 | 1652 48 01 50 | 21 | 34 |
| 734 12 00 01 | 7 | 11 | 1652 02 48 99 | 27 | | 1652 48 02 50 | 21 | |
| 734 12 00 01 | 9 | 30 | 1652 02 49 59 | 27 | A | 1652 48 03 09 | 21 | |
| 735 31 33 01 | 7 | 25 | 1652 02 50 59 | 27 | B | 1652 48 04 09 | 21 | 26 |
| 735 31 40 11 | 5 | 10 | 1652 02 51 59 | 27 | C | 1652 52 49 90 | 15 | 36 |
| 735 31 44 11 | 3 | 7 | 1652 02 52 59 | 27 | D | 1652 52 50 90 | 15 | 33 |

***NUMMER REGISTER*NUMMERNVERZEICHNIS*NUMBER REGISTER*LISTE DE PIECIES PAR ORDRE NUMMERIQUE***


| Detalj nr<br>Best.Nr<br>Part No<br>Code Nº. | Sida<br>Seite<br>Page<br>Page | Pos.nr<br>Pos.Nr<br>Ref.No.<br>Fig.Nº. | Detalj nr<br>Best.Nr<br>Part No<br>Code Nº. | Sida<br>Seite<br>Page<br>Page | Pos.nr<br>Pos.Nr<br>Ref.No.<br>Fig.Nº. | Detalj nr<br>Best.Nr<br>Part No<br>Code Nº. | Sida<br>Seite<br>Page<br>Page | Pos.nr<br>Pos.Nr<br>Ref.No.<br>Fig.Nº. |
|---|---|---|---|---|---|---|---|---|
| 1652 52 51 90 | 15 | 21 | 1658 03 16 00 | 9a | 6 | 1658 64 33 00 | 7 | 19 |
| 1652 52 52 90 | 15 | | 1658 03 16 00 | 11 | 10 | 1658 66 21 00 | 25 | 34 |
| 1652 52 74 90 | 13 | 4 | 1658 03 16 00 | 11 | 20 | 1658 66 39 90 | 15 | 34 |
| 1652 52 75 90 | 13 | 5 | 1658 03 17 00 | 9a | 5 | 1658 66 42 90 | 15 | |
| 1652 52 80 90 | 13 | 16 | 1658 05 59 50 | 21 | 18 | 1658 67 19 00 | 7 | 10 |
| 1652 52 82 90 | 13 | 24 | 1658 05 59 50 | 23 | 18 | 1658 91 99 00 | 5 | 5 |
| 1652 52 84 90 | 13 | 25 | 1658 05 59 50 | 25 | | 1658 92 06 00 | 5 | 4 |
| 1652 52 90 90 | 13 | | 1658 06 62 00 | 15 | | 1658 92 07 00 | 5 | 3 |
| 1652 52 92 50 | 5 | | 1658 06 63 00 | 15 | | 1658 94 89 00 | 7 | 57 |
| 1652 55 00 91 | 15 | | 1658 07 50 00 | 11 | 11 | 1658 94 89 00 | 17 | 4 |
| 1652 55 00 92 | 15 | | 1658 09 59 00 | 15 | 3 | 1658 97 29 90 | 15 | 17 |
| 1652 55 00 93 | 15 | | 1658 09 61 00 | 15 | 23 | 1658 97 30 90 | 15 | |
| 1652 55 00 94 | 15 | | 1658 09 66 50 | 15 | 7 | 1659 00 34 00 | 7 | 23 |
| 1652 55 00 95 | 15 | | 1658 09 67 50 | 15 | 12 | 1659 03 74 00 | 7 | 26 |
| 1652 55 00 96 | 15 | | 1658 10 76 00 | 15 | 27 | 1659 05 31 00 | 9 | 20 |
| 1652 55 12 50 | 3 | 31 | 1658 15 29 00 | 15 | 24 | 1659 08 56 00 | 9 | 10 |
| 1652 55 14 50 | 3 | 22 | 1658 30 46 00 | 13 | 39 | 1659 12 04 00 | 11 | 24 |
| 1652 55 25 00 | 3 | 1 | 1658 30 50 00 | 11 | 23 | 1659 12 05 00 | 11 | 25 |
| 1652 55 26 00 | 3 | 21 | 1658 35 87 00 | 9 | 22 | 1659 13 08 01 | 3 | 5 |
| 1652 55 29 00 | 3 | 3 | 1658 39 81 09 | 25 | | 1659 16 34 00 | 19 | 20 |
| 1652 55 32 00 | 5 | 5 | 1658 40 31 99 | 25 | | 1659 17 79 50 | 11 | 7 |
| 1652 55 56 90 | 7 | 48 | 1658 40 33 09 | 25 | | 1659 18 01 09 | 19 | 33 |
| 1652 55 57 90 | 7 | 49 | 1658 40 82 09 | 25 | 7 | 1659 18 02 09 | 19 | |
| 1652 55 61 00 | 7 | 46 | 1658 40 87 99 | 25 | 6 | 1659 18 03 09 | 19 | 29 |
| 1652 55 62 00 | 7 | 43 | 1658 40 90 90 | 25 | | 1659 18 04 09 | 19 | |
| 1652 59 02 50 | 9 | 6 | 1658 40 91 90 | 25 | 1 | 1659 19 36 00 | 11 | 27 |
| 1652 59 14 00 | 9 | 31 | 1658 49 58 09 | 25 | | 1659 19 38 50 | 11 | 8 |
| 1652 59 24 50 | 5 | 1 | 1658 50 03 09 | 25 | | 1659 19 45 00 | 9 | 23 |
| 1652 59 25 50 | 5 | 1 | 1658 50 04 09 | 25 | | 1659 20 85 09 | 19 | |
| 1652 59 25 50 | 5 | | 1658 50 05 00 | 7 | 5 | 1659 20 86 09 | 19 | |
| 1652 59 91 91 | 7 | 54 | 1658 50 39 09 | 25 | | 1659 21 38 00 | 11 | 9 |
| 1652 59 91 92 | 7 | | 1658 51 91 09 | 25 | 9 | 1659 22 06 09 | 25 | |
| 1652 60 25 00 | 3 | 34 | 1658 51 93 09 | 25 | 5 | 1659 22 07 09 | 25 | 2 |
| 1652 60 31 50 | 5 | 7 | 1658 51 94 09 | 25 | | 1659 22 37 91 | 15 | |
| 1652 60 76 00 | 11 | 21 | 1658 51 95 09 | 25 | | 1659 24 34 00 | 3 | 10 |
| 1652 60 80 00 | 3 | 33 | 1658 51 96 09 | 25 | 3 | 1659 30 05 00 | 7 | 22 |
| 1652 60 93 00 | 7 | 63 | 1658 53 00 00 | 7 | 3 | 1659 30 20 90 | 7 | 59 |
| 1652 60 94 00 | 7 | 64 | 1658 54 38 00 | 15 | 28 | 1659 30 54 09 | 19 | |
| 1652 62 78 00 | 7 | 33 | 1658 54 61 50 | 21 | | 1659 30 55 09 | 19 | 37 |
| 1652 63 31 00 | 29 | 3 | 1658 54 61 50 | 23 | | 1659 30 61 00 | 19 | |
| 1652 63 32 00 | 29 | 1 | 1658 54 61 50 | 25 | | 1659 30 62 00 | 19 | 35 |
| 1652 63 35 00 | 29 | 2 | 1658 54 62 50 | 21 | 11 | 1659 30 79 00 | 5 | 12 |
| 1652 63 39 00 | 29 | 4 | 1658 54 62 50 | 23 | 11 | 1659 32 51 00 | 7 | 37 |
| 1656 54 78 00 | 11 | 18 | 1658 54 62 50 | 25 | 14 | 1659 34 01 90 | 7 | 32 |
| 1657 23 99 01 | 9 | 8 | 1658 54 69 00 | 7 | 65 | 1659 34 69 00 | 13 | 47 |
| 1657 25 47 00 | 15 | 19 | 1658 56 25 00 | 13 | 50 | 1659 34 70 00 | 13 | 45 |
| 1657 30 57 00 | 11 | 16 | 1658 56 36 00 | 11 | 15 | 1659 34 73 00 | 13 | 46 |
| 1657 32 24 01 | 13 | 7 | 1658 56 71 00 | 15 | | 1659 38 06 00 | 5 | 2 |
| 1657 48 14 00 | 3 | 12 | 1658 56 93 00 | 7 | 6 | 1659 38 10 00 | 5 | 15 |
| 1657 48 14 00 | 11 | 2 | 1658 57 79 00 | 7 | 4 | 1659 38 70 90 | 7 | 1 |
| 1657 49 22 50 | 21 | | 1658 58 82 90 | 7 | 42 | 1659 42 86 09 | 25 | |
| 1657 49 22 50 | 23 | | 1658 58 84 00 | 7 | 21 | 1659 42 87 09 | 25 | 4 |
| 1657 49 22 50 | 25 | 32 | 1658 58 84 00 | 9 | 4 | 1659 42 89 00 | 17 | 4 |
| 1657 55 45 00 | 15 | 14 | 1658 58 84 00 | 15 | 5 | 1659 42 89 00 | 25 | 12 |
| 1657 57 46 00 | 11 | 31 | 1658 60 06 90 | 25 | 8 | 1659 42 89 09 | 21 | 9 |
| 1657 57 47 00 | 11 | 22 | 1658 60 43 90 | 9 | 1 | 1659 42 89 09 | 23 | 9 |
| 1657 59 28 00 | 11 | | 1658 60 44 00 | 9 | 13 | 1659 42 89 09 | 25 | 11 |
| 1657 59 34 00 | 11 | 29 | 1658 60 56 90 | 9 | 5 | 1659 42 89 09 | 27 | 10 |
| 1657 59 35 00 | 11 | 30 | 1658 60 79 00 | 9 | 7 | 1659 43 20 50 | 7 | 27 |
| 1657 59 75 91 | 15 | 37 | 1658 60 80 00 | 9 | 2 | 1659 43 21 00 | 7 | 51 |
| 1657 72 31 00 | 11 | 3 | 1658 60 85 90 | 7 | 58 | 1659 44 17 00 | 3 | 11 |
| 1657 72 31 00 | 11 | 19 | 1658 61 65 00 | 7 | 2 | 1659 44 17 00 | 5 | 2 |
| 1657 78 26 00 | 9a | 4 | 1658 61 66 00 | 7 | 12 | 1659 44 42 50 | 19 | 17 |
| 1657 78 26 00 | 11 | 14 | 1658 62 40 08 | 7 | 20 | 1659 45 45 50 | 19 | 22 |
| 1657 78 38 00 | 11 | 12 | 1658 62 40 09 | 15 | 29 | 1659 45 46 50 | 19 | 10 |
| 1657 78 52 00 | 9a | 7 | 1658 62 56 00 | 9a | 1 | 1659 45 94 99 | 21 | |
| 1657 83 83 00 | 3 | 13 | 1658 62 76 00 | 11 | | 1659 45 95 99 | 21 | 5 |
| 1657 83 83 00 | 11 | 1 | 1658 64 05 02 | 5 | 9 | 1659 45 96 09 | 21 | |
| 1658 03 16 00 | 3 | 24 | 1658 64 05 03 | 3 | 6 | 1659 45 97 09 | 21 | 6 |

***NUMMER REGISTER*NUMMERNVERZEICHNIS*NUMBER REGISTER*LISTE DE PIECIES PAR ORDRE NUMMERIQUE***

| Detalj nr<br>Best.Nr<br>Part No<br>Code Nº. | Sida<br>Seite<br>Page<br>Page | Pos.nr<br>Pos.Nr<br>Ref.No.<br>Fig.Nº. |
|---|---|---|
| 1659 45 98 09 | 21 | |
| 1659 45 99 09 | 21 | 4 |
| 1659 46 00 09 | 21 | |
| 1659 46 01 09 | 21 | |
| 1659 46 02 09 | 21 | |
| 1659 46 03 09 | 21 | |
| 1659 46 04 09 | 21 | |
| 1659 46 05 09 | 21 | 3 |
| 1659 46 08 09 | 21 | |
| 1659 46 08 09 | 23 | |
| 1659 46 08 09 | 27 | |
| 1659 46 09 09 | 21 | 2 |
| 1659 46 09 09 | 23 | 2 |
| 1659 46 09 09 | 27 | 2 |
| 1659 46 12 09 | 21 | |
| 1659 46 12 09 | 23 | |
| 1659 46 12 09 | 27 | |
| 1659 46 13 09 | 21 | 8 |
| 1659 46 13 09 | 23 | 8 |
| 1659 46 13 09 | 27 | 9 |
| 1659 46 14 90 | 21 | 7 |
| 1659 46 15 90 | 21 | 20 |
| 1659 46 15 90 | 23 | 20 |
| 1659 46 16 90 | 21 | |
| 1659 46 17 90 | 21 | 1 |
| 1659 46 22 09 | 21 | |
| 1659 46 22 09 | 25 | 35 |
| 1659 46 22 99 | 23 | |
| 1659 46 22 99 | 27 | |
| 1659 46 23 09 | 21 | 10 |
| 1659 46 23 09 | 25 | |
| 1659 46 23 99 | 23 | 10 |
| 1659 46 23 99 | 27 | 11 |
| 1659 46 24 50 | 17 | |
| 1659 46 25 50 | 17 | 6 |
| 1659 46 66 00 | 3 | 2 |
| 1659 46 67 00 | 3 | 19 |
| 1659 46 68 00 | 3 | 15 |
| 1659 48 28 00 | 7 | 36 |
| 1659 55 27 90 | 7 | 40 |
| 1659 56 78 50 | 17 | 1 |
| 1659 56 78 59 | 17 | |
| 1659 56 79 50 | 17 | |
| 1659 56 79 59 | 17 | |
| 1650 36 04 03 | 21 | 28 |
| 1659 57 74 00 | 5 | 3 |
| 1659 58 63 50 | 5 | 11 |
| 1659 60 64 50 | 17 | |
| 1659 60 65 50 | 17 | 1 |
| 1659 60 84 99 | 23 | |
| 1659 60 85 99 | 23 | 5 |
| 1659 60 86 09 | 23 | |
| 1659 60 87 09 | 23 | 6 |
| 1659 60 90 09 | 23 | |
| 1659 60 90 09 | 27 | |
| 1659 60 91 09 | 23 | 4 |
| 1659 60 91 09 | 27 | 5 |
| 1659 60 92 09 | 23 | |
| 1659 60 92 09 | 27 | |
| 1659 60 93 09 | 23 | |
| 1659 60 93 09 | 27 | |
| 1659 60 94 09 | 23 | |
| 1659 60 94 09 | 27 | |
| 1659 60 95 09 | 23 | 3 |
| 1659 60 95 09 | 27 | 4 |
| 1659 61 04 90 | 23 | 7 |
| 1659 61 04 90 | 27 | 8 |
| 1659 61 12 90 | 9 | |
| 1659 61 38 00 | 11 | 33 |
| 1659 62 68 50 | 17 | |
| 1659 62 69 50 | 17 | |
| 1659 62 72 09 | 21 | |
| 1659 62 72 09 | 27 | |
| 1659 62 73 09 | 21 | 31 |
| 1659 62 73 09 | 27 | 3 |
| 1659 65 30 00 | 7 | 61 |
| 1659 69 12 00 | 7 | 55 |
| 1659 73 36 50 | 13 | 20 |
| 1659 73 37 00 | 13 | 22 |
| 1659 73 38 00 | 13 | 21 |
| 1659 73 39 50 | 13 | 42 |
| 1659 79 75 00 | 13 | 37 |
| 1659 80 96 00 | 9 | 24 |
| 1659 82 51 50 | 19 | |
| 1659 82 58 50 | 19 | 30 |
| 1659 82 59 50 | 19 | |
| 1659 82 60 50 | 19 | |
| 1659 82 61 50 | 19 | |
| 1659 82 62 50 | 19 | |
| 1659 83 87 90 | 7 | 16 |
| 1659 83 88 91 | 7 | 7 |
| 1659 83 89 90 | 7 | 50 |
| 1659 84 96 00 | 7 | 34 |
| 1659 88 35 00 | 3 | 8 |
| 1659 88 51 00 | 11 | 35 |
| 1659 90 31 50 | 19 | 36 |
| 1659 90 32 50 | 19 | |
| 1659 90 33 50 | 19 | 15 |
| 1659 90 34 50 | 19 | |
| 1659 90 35 50 | 19 | 3 |
| 1659 90 49 50 | 19 | 14 |
| 1659 90 50 50 | 19 | |
| 1659 90 51 50 | 19 | 1 |
| 1659 95 00 90 | 9 | 3 |
| 1659 96 27 50 | 17 | |
| 1659 96 28 50 | 17 | |

Överums Bruk AB , 590 96 Överum, Tel. 0493 - 36100
Telephone: + 46 493 36100. Telefax: 0493 30800
Web adress: http://www.overums-bruk.se
E-mail: sales@overums-bruk.se

From serial No.  10 285222

**1656 80 05 10** **01.2010**