# CXL

Reservdelslista
Spare parts list
Ersatzteilliste
Onderdelenlijst
Liste de pièce de rechange
Listino di prezzi de ricambio

Edition:
**181221**

ÖVERUM

| Sida<br>Seite<br>Page<br>Page | Bild<br>Bild<br>Fig.No.<br>Fig.Nº. | Typ | Innehålsförteckning | Inhaltsverzeichnis | Index of contents | Table des matieres |
|---|---|---|---|---|---|---|
| 3 | 1683 | | TOPP<br>RAM | KOPFSTÜCK<br>RAHMEN | HEADSTOCK<br>MAIN | TETE<br>CHÂISSES-POUTRE |
| 5 | 1684 | | RAM | RAHMEN | MAIN | CHÂISSES-POUTRE |
| 7 | 1685 | | MELLANLED | ZWISCHENGLIED | INTERMEDIATE | INTERMÉDIAIRE |
| 9 | 1689 | | HYDRAULIK | HYDRAULISCH | HYDRAULIC | HYDRAULIQUE |
| 11 | 1686 | | HYDRAULIK | HYDRAULISCH | HYDRAULIC | HYDRAULIQUE |
| 13 | 1687 | | VÄNDCYLINDER | WENDEZYLINDER | REVERSING CYL | VÉRIN TOURNANT |
| 15 | 1672 | | JUSTERING AV<br>1:A TILTAN | EINSTELLUNG DER<br>FRONTFURCHEN-<br>BREITE | FRONT FURROW<br>WIDTH<br>ADJUSTMENT | MECANIQUE |
| 17 | 1691 | | LYFTCYLINDER | HUBZYLINDER | LIFT CYLINDER | VÉRIN DE LEVANGE |
| 19 | 1429 | H | ÅS | GRINDEL | BEAM | SUPPORT D'AGE |
| 21 | 1280<br>1281 | | STENSÄKRINGS-<br>CYLINDER | HYDRAULISCHER<br>ZYLINDER | HYDRAULIC<br>CYLINDER | DISPOSITIF<br>CYLINDRE |
| 23 | 1688 | | STENSÄKRINGS-<br>HYDRAULIK | HYDRAULISCHER<br>STEINSICHERUNG | HYDRAULIC<br>STONE TRIP | DISPOSITIF<br>DE SECURITE<br>HYDRAULIQUE |
| 25 | 1614 | | PENDELHJUL | PENDELRAD | PENDULUM<br>WHEEL | ROUE<br>PENDULAIRE |
| 27 | 1329 | | PENDELHJUL | PENDELRAD | PENDULUM<br>WHEEL | ROUE<br>PENDULAIRE |
| 29 | 1690 | | KOMBIHJUL | KOMBIRAD | COMBINDE<br>WHEEL | ROUE<br>COMBINASION |
| 31 | 698 | | SKIVRIST | SCHEIBENSECH | DISC COULTER | COUTRE<br>CIRCULAIRE |
| 33 | 103d | XL,XLP | PLOGKROPP | PFLUGKÖRPER | PLOUGH<br>BOTTOMS | CORPS DE<br>CHARRUE |
| 35 | 1322 | XLD | PLOGKROPP | PFLUGKÖRPER | PLOUGH<br>BOTTOMS | CORPS DE<br>CHARRUE |
| 37 | 660 | XU | PLOGKROPP | PFLUGKÖRPER | PLOUGH<br>BOTTOMS | CORPS DE<br>CHARRUE |
| 39 | 665 | XS | PLOGKROPP | PFLUGKÖRPER | PLOUGH<br>BOTTOMS | CORPS DE<br>CHARRUE |
| 41 | 1520 | XSD | PLOGKROPP | PFLUGKÖRPER | PLOUGH<br>BOTTOMS | CORPS DE<br>CHARRUE |
| 43 | 700, 701, 702 | XL,XU,XS<br>XLD, XSD | SKUMVINGE | EINLEGER-<br>STREICHBLECH | COVERBOARD | DEFLECTEUR |
| 45 | 1010 | | SKUMRIST | VORSCHÄLER | SKIMMER | RASETTE |
| 47 | 1319 | | DEKALER | AUFKLEBER | STICKERS | DECALCOMANIE |

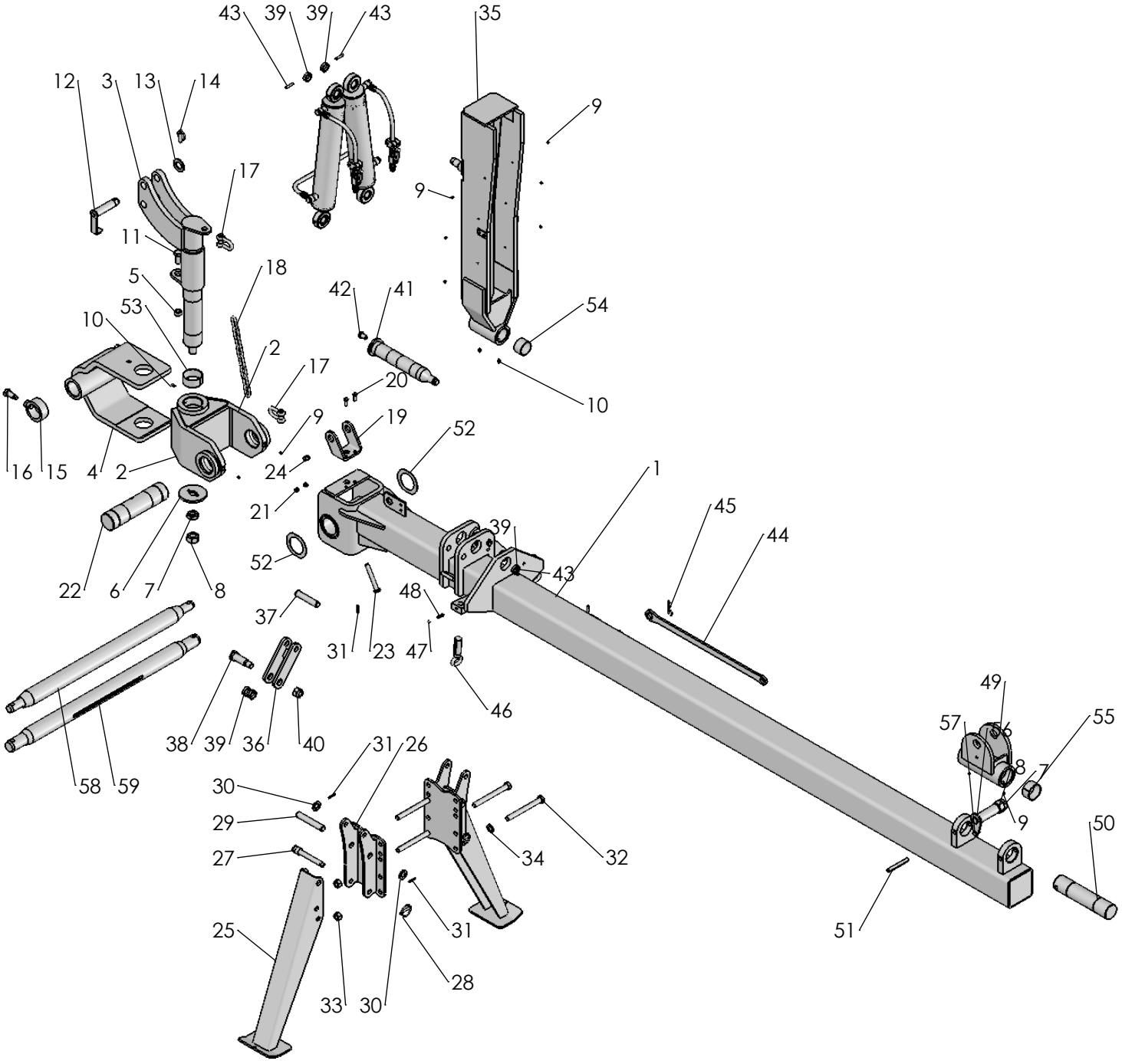


1683



2018-11-06

| Pos nr/ Ref No | Detalj nr/ Part No | Benämning | Description |
|---|---|---|---|
| **1683 Ö** | **37124** | **DRAGRAM / TOPP CXL** | **DRAW FRAME / HEADSTOCK CXL** |
| 1 | 4165 34324 90 | Dragbom CXL | Draw frame CXL |
| 2 | 4165 98557 90 | Kors | Bracket |
| 3 | 4165 25702 90 | Vertikalaxel | Vertical axle |
| 4 | 4165 96434 90 | Ledbygel | Joint bracket |
| 5 | 4165 20593 00 | Hylsa, Ø20/30x17 | Sleeve, Ø20/30x17 |
| 6 | 4165 96949 00 | Bricka, Ø31/120x10 | Washer, Ø31/120x10 |
| 7 | 4731 43 30 01 | Mutter ML6M 30- 5 FZB | Hexagon Thin Nut ISO - 4035 - M30 |
| 8 | 4731 23 30 01 | Mutter M6M 30- 8 FZB | Nut ISO 4032 - M30-8 FZB |
| 9 | 4738 88 20 03 | Smörjnippel, AM 8x1,25 FZB | Grease nipple, AM 8x1,25 FZB |
| 10 | 4738 88 80 03 | Smörjnippel, CM 8x1,25 FZB | Grease nipple, CM 8x1,25 FZB |
| 11 | 4725 26 73 81 | Skruv M6S 20x 45-10.9 MW | Bolt ISO 4014 M20x45-10.9 MW |
| 12 | 4165 34616 00 | Toppstångstapp, Ø32, fast | Top link axle, Ø32, fixed |
| 13 | 4734 12 06 01 | Bricka BRB 34x 60 FZB | Washer ISO 7089 - 33 |
| 14 | 4165 85005 00 | Ringsprint, Ø11x34 | Linch pin, Ø11x34 |
| 15 | 4165 86584 00 | Stoppring | Lock ring |
| 16 | 4165 85602 00 | Skruv M6S 20x50-10.9 MW spec | Bolt M6S 20x50-10.9 MW spec |
| 17 | 4165 89686 00 | Schackel M16, FZB | Schackle M16, FZB |
| 18 | 4165 27802 00 | Kätting Ø8x47, 8 länk, L=376 | Chain Ø8x47, 8 links, L=376 |
| 19 | 4165 22970 00 | Hållare | Bracket |
| 20 | 4725 24 95 51 | Skruv M6S 10x 30- 8.8 FZB | Bolt ISO 4014 - M10 x 30-8.8 FZB |
| 21 | 4731 23 20 01 | Mutter M6M 10- 8 FZB | Nut Hexagon Nut ISO - 4032 - M10-8 FZB |
| 22 | 4165 98560 50 | Korsaxel | Axle |
| 23 | 4725 26 44 81 | Skruv M6S 16x120-10.9 MW | Bolt ISO 4014 - M16 x120-10.9 MW |
| 24 | 4731 23 24 51 | Mutter M6M 16-10 MW | Nut ISO-4032 M16-10 MW |
| 25 | 4165 23310 40 | Ben CXL, kompl | Leg CXL, cpl |
| 26 | 4165 22385 90 | Benfäste, kompl | Leg mount, cpl |
| 27 | 4165 22389 00 | Tapp, Ø20x143 | Pin, Ø20x143 |
| 28 | 4165 17040 00 | Ringsprint, Ø8x47 | Linch pin, Ø8x47 |
| 29 | 4165 95793 00 | Cylindrisk pinne, Ø25x154 | Parallel pin, Ø25x154 |
| 30 | 4734 11 98 01 | Bricka BRB 25x 44 FZB | Washer ISO 7089 - 24 |
| 31 | 4721 43 47 01 | Fjädrande rörpinne FRP 6x 40 FZB | Spring Pin ISO 8752 - 6 x 40 FZB |
| 32 | 4725 26 97 51 | Skruv M6S 20x200- 8.8 FZB | Bolt ISO 4014 - M20 x 200-8.8 FZB |
| 33 | 4731 23 26 51 | Mutter M6M 20-10 MW | Nut ISO - 4032 - M20-10 MW |
| 34 | 4734 11 92 01 | Bricka BRB 21x 37 FZB | Washer ISO 7089-M20-200 HV |
| 35 | 4165 35350 90 | Medbringare | Turn over arm |
| 36 | 4165 85526 90 | Länk | Link |
| 37 | 4165 97747 00 | Cylindrisk bult, Ø25x122 | Headed clevis pin, Ø25x122 |
| 38 | 4165 92012 00 | Kolvstångstapp | Piston rod pin |
| 39 | 4165 85528 00 | Bricka, Ø30,5/40x10,5 | Washer, Ø30,5/40x10,5 |
| 40 | 4165 03650 09 | Mutter M6M 24-10 NF MW | Nut ISO-7040-M24-10 MW |
| 41 | 4165 95778 50 | Vridaxel komplett | Turn-over axle |
| 42 | 4725 26 22 51 | Skruv M6S 16x 25- 8.8 FZB | Bolt ISO 4014 - M16 x 25-8.8 FZB |
| 43 | 4721 43 84 01 | Fjädrande rörpinne FRP 8x 45 FZB | Spring Pin ISO 8752 - 8 x 45 FZB |
| 44 | 4165 86711 00 | Plognyckel, NV 24/30 | Plough wrench, KW 24/30 |
| 45 | 4165 85763 00 | Hårnålssprint, Ø3,5 | Cotter pin, Ø3,5 |
| 46 | 4165 91458 00 | Inställningsskruv, M30 | Adjustment screw, M30 |
| 47 | 4738 61 32 02 | Kula | Ball |
| 48 | 4165 83046 00 | Tryckfjäder | Push Spring |
| 49 | 4165 94775 90 | Lagring CXL | Journal CXL |
| 50 | 4165 94806 50 | Axel, Ø70x318 | Axle, Ø70x318 |
| 51 | 4721 45 77 10 | Fjädrande rörpinne FRP 16x120 MW | Spring Pin ISO 8752 - 16 x 120 MW |
| 52 | 4165 20596 00 | Slitbricka, Ø81/120x1,5 | Wear washer, Ø81/120x1,5 |
| 53 | 4165 85965 00 | Glidlager, Ø80/85x40 | Slide bearing, Ø80/85x40 |
| 54 | 4165 85625 00 | Glidlager, Ø60/65/40 | Slide bearing, Ø60/65/40 |
| 55 | 4165 97545 00 | Glidlager, Ø70/75x40 | Slide bearing, Ø70/75x40 |
| 56 | 4165 20708 00 | Låstapp Ø40, CXL | Locking pin Ø40, CXL |
| 57 | 4725 25 32 51 | Skruv M6S 12x 20- 8.8 FZB | Bolt ISO 4014 - M12 x 20-8.8 FZB |
| 58 | 4165 95731 40 | Bäraxel kat 3, L=965 | Cross shaft cat 3, L=965 |
| 59 | 4165 27660 40 | Bäraxel kat 4 kort, L=965 | Cross shaft cat 4 short, L=965 |

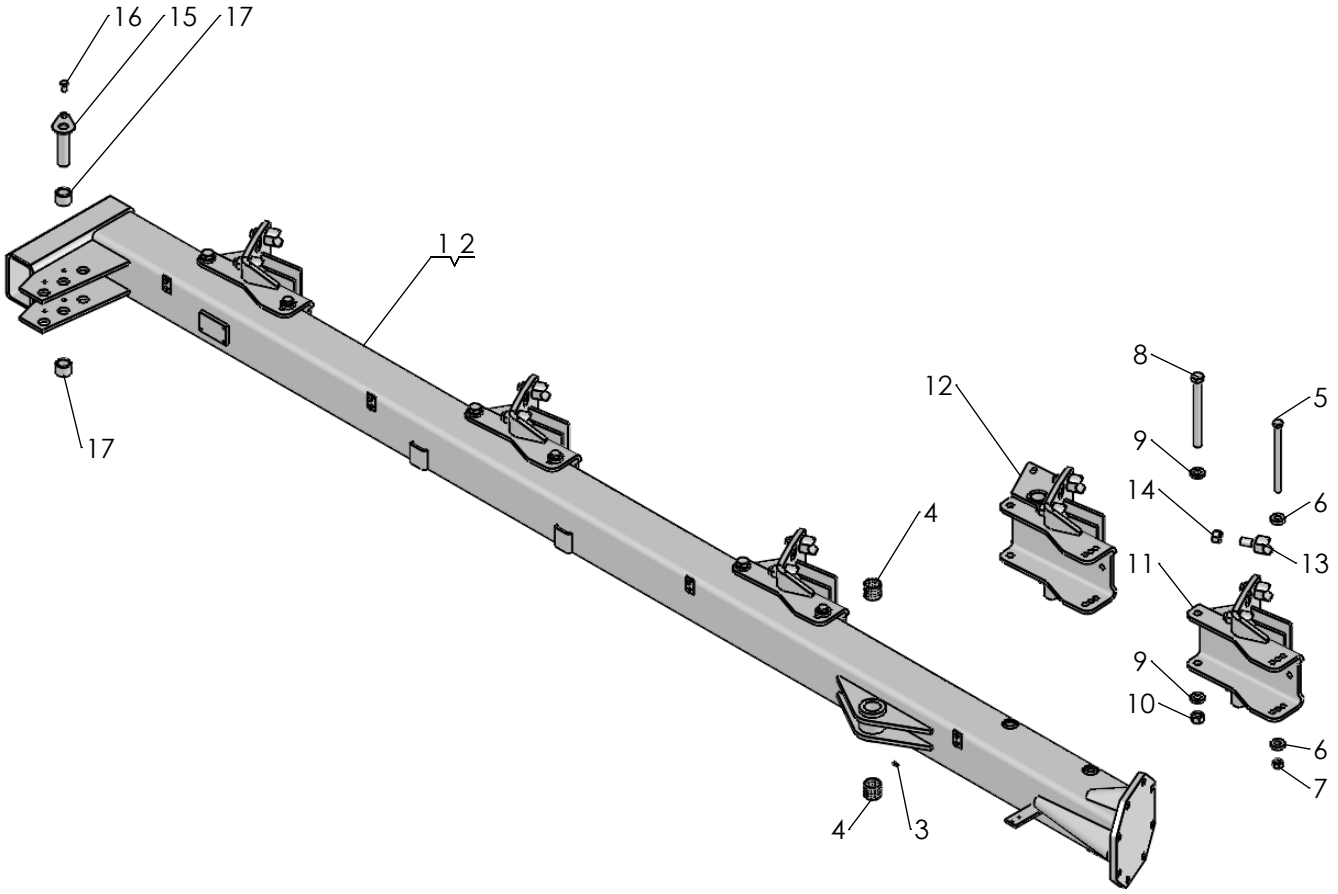


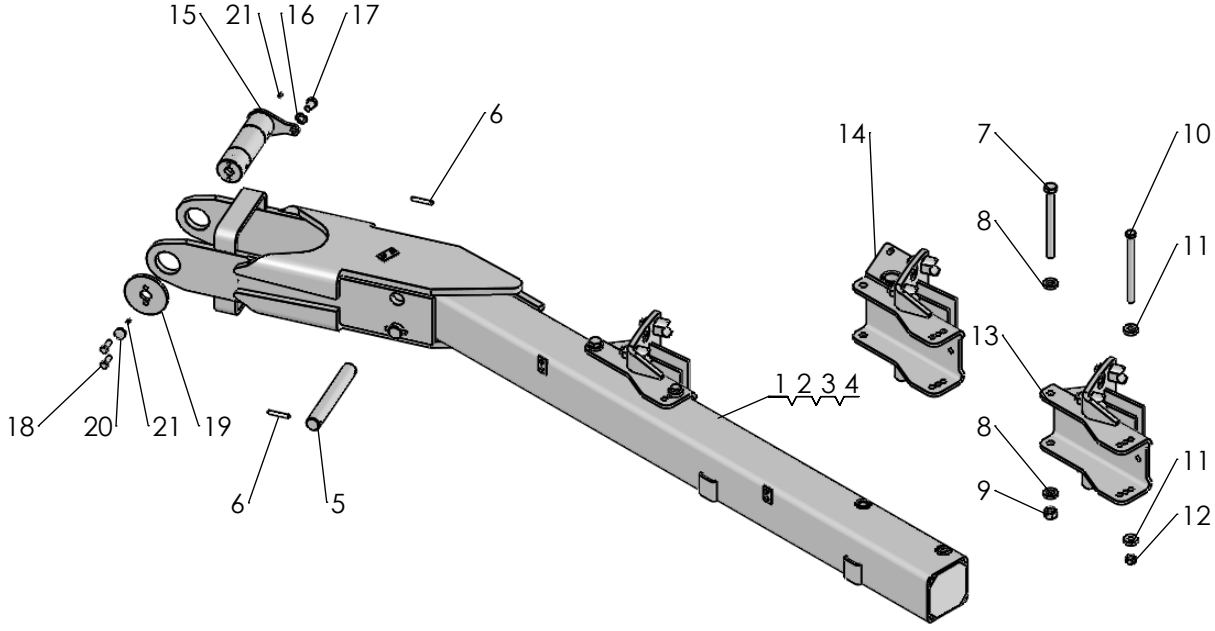


1684



2018-11-05

| Pos nr/ Ref No | Detalj nr/ Part No | Benämning | Description |
|---|---|---|---|
| **1684 Ö1** | **37123** | **RAM CXL** | **FRAME CXL** |
| 1 | 4165 96941 90 | Ram CXL 4100 | Frame CXL 4100 |
| 2 | 4165 96942 90 | Ram CXL 5100 | Frame CXL 5100 |
| 3 | 4738 88 20 03 | Smörjnippel, AM 8x1,25 FZB | Grease nipple, AM 8x1,25 FZB |
| 4 | 4165 20701 00 | Glidlager, Ø40/44x40 | Plain bearing, , Ø40/44x40 |
| 5 | 4165 90856 00 | Skruv M16x215-12.9 MW | Bolt M16x215-12.9 MW |
| 6 | 4165 85884 00 | Bricka, Ø17/38x10 | Washer, Ø17/38x10 |
| 7 | 4165 03607 05 | Mutter M6M 16-12 MW | Nut ISO 4032-16-12 MW |
| 8 | 4165 90531 00 | Skruv M20x215-12.9 MW | Bolt M20x215-12.9 MW |
| 9 | 4165 83587 00 | Bricka, Ø20,5/38,5x8 | Washer, Ø20,5/38,5x8 |
| 10 | 4165 03607 07 | Mutter M6M 20-12 MW | Nut ISO 4032-20-12 MW |
| 11 | 4165 99500 90 | Åshus auto | Beam house |
| 12 | 4165 99532 90 | Åshus Canada | Beam house Canada |
| 13 | 4165 86080 00 | Säte M20 | Seat M20 |
| 14 | 4731 23 26 51 | Mutter M6M 20-10 MW | Nut ISO - 4032 - M20-10 MW |
| 15 | 4165 96912 00 | Låstapp, Ø30x119 | Locking pin, Ø30x119 |
| 16 | 4725 25 32 51 | Skruv M6S 12x 20- 8.8 FZB | Bolt ISO 4014 - M12 x 20-8.8 FZB |
| 17 | 4165 90048 00 | Hylsa, Ø31/41,3x30 | Sleeve, Ø31/41,3x30 |

| Pos nr/ Ref No | Detalj nr/ Part No | Benämning | Description |
|---|---|---|---|
| **1684 Ö2** | **37125** | **REAR FRAME CXL** | **BAKRE RAM CXL** |
| 1 | 4165 98664 90 | Bakre ram 16", 2-skär | Rear frame 16", 2-furrows |
| 2 | 4165 98665 90 | Bakre ram 18", 2-skär | Rear frame 18", 2-furrows |
| 3 | 4165 96959 90 | Bakre ram 16", 3-skär | Rear frame 16", 3-furrows |
| 4 | 4165 98662 90 | Bakre ram 18", 3-skär | Rear frame 18", 3-furrows |
| 5 | 4165 99514 00 | Cylindrisk pinne, Ø38x274 | Parallel pin, Ø38x274 |
| 6 | 4721 44 23 01 | Fjädrande rörpinne FRP 10x 60 FZB | Spring Pin ISO 8752 - 10 x 60 FZB |
| 7 | 4165 90531 00 | Skruv M20x215-12.9 MW | Bolt M20x215-12.9 MW |
| 8 | 4165 83587 00 | Bricka, Ø20,5/38,5x8 | Washer, Ø20,5/38,5x8 |
| 9 | 4165 03607 07 | Mutter M6M 20-12 MW | Nut ISO 4032-20-12 MW |
| 10 | 4165 90856 00 | Skruv M16x215-12.9 MW | Bolt M16x215-12.9 MW |
| 11 | 4165 85884 00 | Bricka, Ø17/38x10 | Washer, Ø17/38x10 |
| 12 | 4165 03607 05 | Mutter M6M 16-12 MW | Nut ISO 4032-16-12 MW |
| 13 | 4165 99500 90 | Åshus auto | Beam house |
| 14 | 4165 99532 90 | Åshus Canada | Beam house Canada |
| 15 | 4165 99226 50 | Ledaxel, CXL | Link axle |
| 16 | 4734 11 86 01 | Bricka BRB 17x30 FZB | Washer ISO 7089 - 16 |
| 17 | 4725 26 22 51 | Skruv M6S 16x 25- 8.8 FZB | Bolt ISO 4014 - M16 x 25-8.8 FZB |
| 18 | 4725 25 38 51 | Skruv M6S 12x 35- 8.8 FZB | Bolt ISO 4014 - M12 x 35-8.8 FZB |
| 19 | 4165 96949 00 | Bricka, Ø31/120x10 | Washer, Ø31/120x10 |
| 20 | 4165 98782 00 | Skyddsplugg, Ø28/25 | Protective cap, Ø28/25 |
| 21 | 4738 88 20 03 | Smörjnippel, AM 8x1,25 FZB | Grease nipple, AM 8x1,25 FZB |

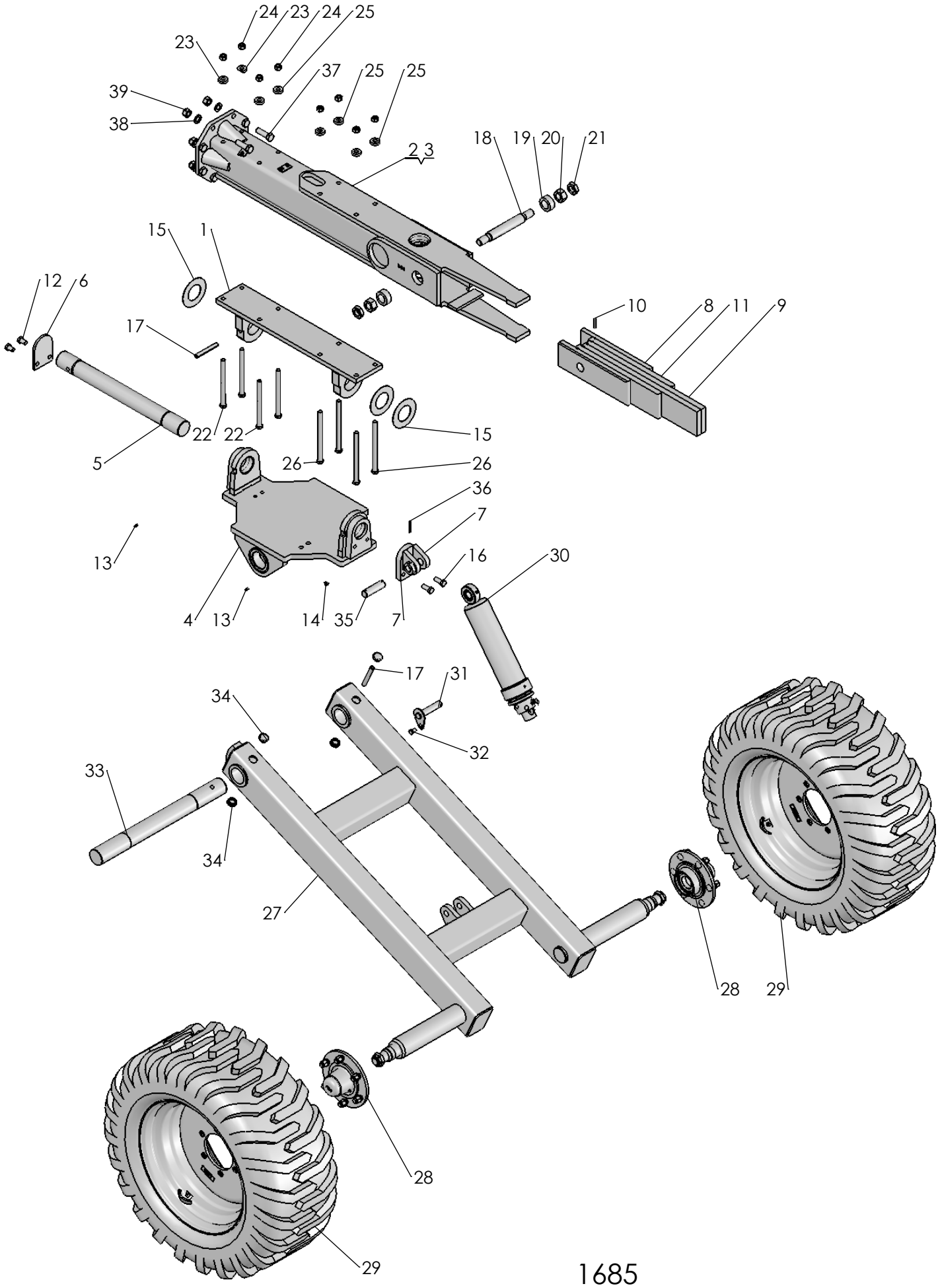


1685



2018-11-05

| Pos nr/ Ref No | Detalj nr/ Part No | Benämning | Description |
|---|---|---|---|
| **1685 Ö** | **37126** | **MELLANRAM CXL** | **MIDDLE FRAME CXL** |
| 1 | 4165 96867 90 | Ledplatta | Joint plate |
| 2 | 4165 96956 90 | Vagnledsram 16", H-plog | Wagon frame 16", H |
| 3 | 4165 99956 90 | Vagnledsram 18", H-plog | Wagon frame 18", H |
| 4 | 4165 32857 40 | Vagnled CXL | Wagon bracket CXL |
| 5 | 4165 96869 50 | Vagnledsaxel | Joint axle |
| 6 | 4165 20704 40 | Anliggningsplåt | Plate |
| 7 | 4165 97385 40 | Cylinderfäste | Cylinder bracket |
| 8 | 4165 99511 00 | Bladfjäder kort | Plate spring short |
| 9 | 4165 99504 00 | Bladfjäder lång | Plate spring long |
| 10 | 4735 92 42 00 | Plattkil 6x 6- 56 | flat key, 6x 6- 56 |
| 11 | 4165 99505 00 | Bladfjäder mellan | Plate spring middle |
| 12 | 4725 26 22 51 | Skruv M6S 16x 25- 8.8 FZB | Bolt ISO 4014 - M16 x 25-8.8 FZB |
| 13 | 4738 88 20 03 | Smörjnippel, AM 8x1,25 FZB | Grease nipple, AM 8x1,25 FZB |
| 14 | 4738 88 80 03 | Smörjnippel, CM 8x1,25 FZB | Grease nipple, CM 8x1,25 FZB |
| 15 | 4165 20705 00 | Bricka, Ø71/130x1,5 | Washer, Ø71/130x11,5 |
| 16 | 4725 26 28 81 | Skruv M6S 16x 40-10.9 MW | Bolt ISO 4014 - M16 x 40-10.9 MW |
| 17 | 4721 45 77 10 | Fjädrande rörpinne FRP 16x120 MW | Spring Pin ISO 8752 - 16 x 120 MW |
| 18 | 4165 99516 00 | Skruv | Screw |
| 19 | 4165 99517 00 | Hylsa, Ø38/60x25 | Sleeve, Ø38/60x25 |
| 20 | 4731 23 30 01 | Mutter M6M 30- 8 FZB | Nut ISO 4032 - M30-8 FZB |
| 21 | 4731 43 30 01 | Mutter ML6M 30- 5 FZB | Hexagon Thin Nut ISO - 4035 - M30 |
| 22 | 4725 26 54 81 | Skruv M6S 16x220-10.9 MW | Bolt ISO 4014 - M16 x220-10.9 MW |
| 23 | 4165 28872 00 | Bricka, Ø17/38x10 med fas | Washer, Ø17/38x10 with chamfer |
| 24 | 4165 03607 05 | Mutter M6M 16-12 MW | Nut ISO 4032-16-12 MW |
| 25 | 4165 85884 00 | Bricka, Ø17/38x10 | Washer, Ø17/38x10 |
| 26 | 4725 26 55 81 | Skruv M6S 16x240-10.9 MW | Bolt ISO 4014 - M16 x240-10.9 MW |
| 27 | 4165 97374 40 | Vagnram | Wagon frame |
| 28 | 4165 23700 50 | Hjulnav FAD 3A572 | Wheel hub FAD 3A572 |
| 29 | 4165 90943 00 | Hjul kompl 400/55-22.5 | Wheel compl 400/55-22.5 |
| 30 | 4165 20217 50 | Hydraulcylinder EV, Ø90/40x260 | Hydraulic cylinder SA, Ø90/40x260 |
| 31 | 4165 96531 00 | Låstapp, Ø25x116 | Locking pin, Ø25x116 |
| 32 | 4725 25 32 51 | Skruv M6S 12x 20- 8.8 FZB | Bolt ISO 4014 - M12 x 20-8.8 FZB |
| 33 | 4165 96868 50 | Korsaxel | Cross axle |
| 34 | 4165 97372 00 | Skyddsplugg, Ø34-38 | Protective cap, Ø34-38 |
| 35 | 4165 89274 00 | Cylindrisk pinne, Ø30x106 | Parallel pin, Ø30x106 |
| 36 | 4721 43 50 01 | Fjädrande rörpinne FRP 6x 55 FZB | Spring Pin ISO 8752 - 6 x 55 FZB |
| 37 | 4725 26 77 81 | Skruv M6S 20x 65-10.9 MW | Bolt ISO 4014 - M20 x 65-10.9 MW |
| 38 | 4734 11 92 01 | Bricka BRB 21x 37 FZB | Washer ISO 7089-M20-200 HV |
| 39 | 4731 23 26 51 | Mutter M6M 20-10 MW | Nut ISO - 4032 - M20-10 MW |

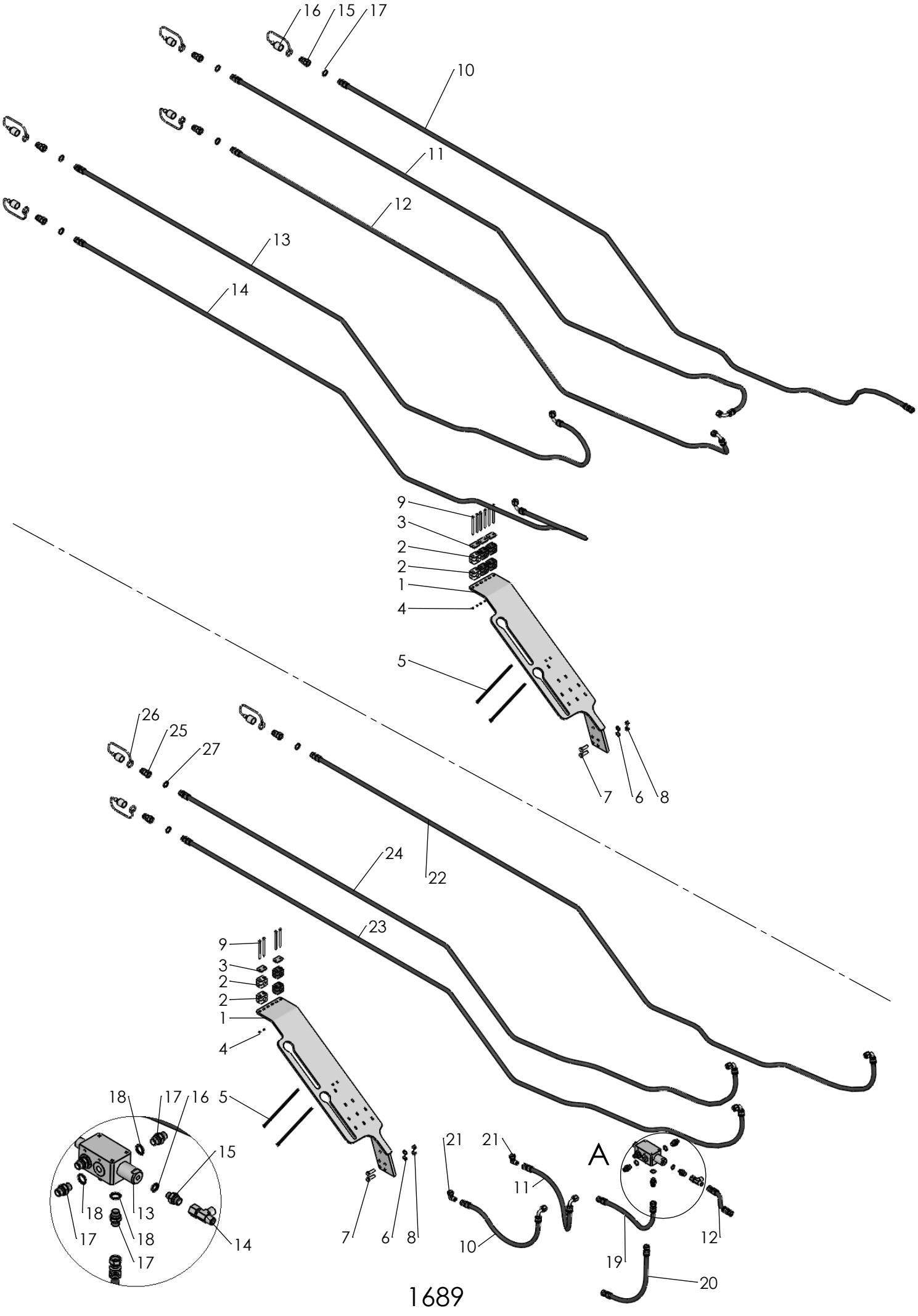


1689



2018-11-06

| Pos nr/ Ref No | Detalj nr/ Part No | Benämning | Description |
|---|---|---|---|
| **1689 Ö1** | **37135** | **HYDRAULIK UTAN VENTIL CXL** | **HYDRAULICS WITHOUT VALVE CXL** |
| 1 | 4165 96545 40 | Slanghållare | Hose bracket |
| 2 | 4165 23812 00 | Klammerpar, Ø16 | Tube clamps, Ø16 |
| 3 | 4165 91205 00 | Täckplatta 26 | Covering plate 26 |
| 4 | 4731 23 16 01 | Mutter M6M 6- 8 FZB | Nut ISO - 4032 - M6-8 FZB |
| 5 | 4165 12002 78 | Buntband svart, L=368 | Self-locking ties, L=368 |
| 6 | 4734 11 73 01 | Bricka BRB 10,5x 20 FZB | Washer ISO 7089 - 10 FZB |
| 7 | 4725 24 97 51 | Skruv M6S 10x 35- 8.8 FZB | Bolt ISO 4014 - M10 x 35-8.8 FZB |
| 8 | 4731 23 20 01 | Mutter M6M 10- 8 FZB | Nut Hexagon Nut ISO - 4032 - M10-8 FZB |
| 9 | 4725 23 88 51 | Skruv M6S 6x 90- 8.8 FZB | Bolt ISO 4014 - M6 x 90-8.8 FZB |
| 10 | 4165 99979 00 | Hydraulslang 3/8, L=4150 | Hydraulic hose 3/8, L=4150 |
| 11 | 4165 27433 00 | Hydraulslang 3/8, L=3620 | Hydraulic hose 3/8, L=3620 |
| 12 | 4165 27433 00 | Hydraulslang 3/8, L=3620 | Hydraulic hose 3/8, L=3620 |
| 13 | 4165 27433 00 | Hydraulslang 3/8, L=3620 | Hydraulic hose 3/8, L=3620 |
| 14 | 4165 27433 00 | Hydraulslang 3/8, L=3620 | Hydraulic hose 3/8, L=3620 |
| 15 | 4165 74814 00 | Handel 1/2" | Quick coupling M, 1/2" |
| 16 | 4165 78383 00 | Handelsskydd | Protective cap |
| 17 | 4165 80316 00 | Gummistålbricka, G1/2 | Bonded seal, G1/2 |

| Pos nr/ Ref No | Detalj nr/ Part No | Benämning | Description |
|---|---|---|---|
| **1689 Ö2** | **37136** | **HYDRAULIK MED VENTIL CXL** | **HYDRAULICS WITH VALVE CXL** |
| 1 | 4165 96545 40 | Slanghållare | Hose bracket |
| 2 | 4165 23812 00 | Klammerpar, Ø16 | Tube clamps, Ø16 |
| 3 | 4165 91205 00 | Täckplatta 26 | Covering plate 26 |
| 4 | 4731 23 16 01 | Mutter M6M 6- 8 FZB | Nut ISO - 4032 - M6-8 FZB |
| 5 | 4165 12002 78 | Buntband svart, L=368 | Self-locking ties, L=368 |
| 6 | 4734 11 73 01 | Bricka BRB 10,5x 20 FZB | Washer ISO 7089 - 10 FZB |
| 7 | 4725 24 97 51 | Skruv M6S 10x 35- 8.8 FZB | Bolt ISO 4014 - M10 x 35-8.8 FZB |
| 8 | 4731 23 20 01 | Mutter M6M 10- 8 FZB | Nut Hexagon Nut ISO - 4032 - M10-8 FZB |
| 9 | 4725 23 88 51 | Skruv M6S 6x 90- 8.8 FZB | Bolt ISO 4014 - M6 x 90-8.8 FZB |
| 10 | 4165 98877 00 | Hydraulslang 3/8, L=800 | Hydraulic hose 3/8, L=800 |
| 11 | 4165 98877 00 | Hydraulslang 3/8, L=800 | Hydraulic hose 3/8, L=800 |
| 12 | 4165 98878 00 | Hydraulslang 3/8, L=360 | Hydraulic hose 3/8, L=360 |
| 13 | 4165 93961 50 | Omkastarventil, tryckstyrd | Diverter valve, pressure controlled |
| 14 | 4165 93968 00 | T-adapt | T-Union |
| 15 | 4165 93574 00 | Rak adapt, 3/8" - 1/4" | Stright union, 3/8"-1/4" |
| 16 | 4165 12983 01 | Gummistålbricka, G1/4" | Bonded seal, G1/4 |
| 17 | 4165 92434 00 | Rak adapt, 3/8" - 3/8" | Stright union, 3/8" - 3/8" |
| 18 | 4165 94417 00 | Gummistålbricka, G3/8 | Bonded seal, G3/8 |
| 19 | 4165 92920 00 | Hydraulslang 3/8, L=550 | Hydraulic hose 3/8, L=550 |
| 20 | 4165 92920 00 | Hydraulslang 3/8, L=550 | Hydraulic hose 3/8, L=550 |
| 21 | 4165 92939 00 | L-Adapt 3/8" - 3/8" | L-Union 3/8" - 3/8" |
| 22 | 4165 27433 00 | Hydraulslang 3/8, L=3620 | Hydraulic hose 3/8, L=3620 |
| 23 | 4165 27433 00 | Hydraulslang 3/8, L=3620 | Hydraulic hose 3/8, L=3620 |
| 24 | 4165 27433 00 | Hydraulslang 3/8, L=3620 | Hydraulic hose 3/8, L=3620 |
| 25 | 4165 74814 00 | Handel 1/2" | Quick coupling M, 1/2" |
| 26 | 4165 78383 00 | Handelsskydd | Protective cap |
| 27 | 4165 80316 00 | Gummistålbricka, G1/2 | Bonded seal, G1/2 |

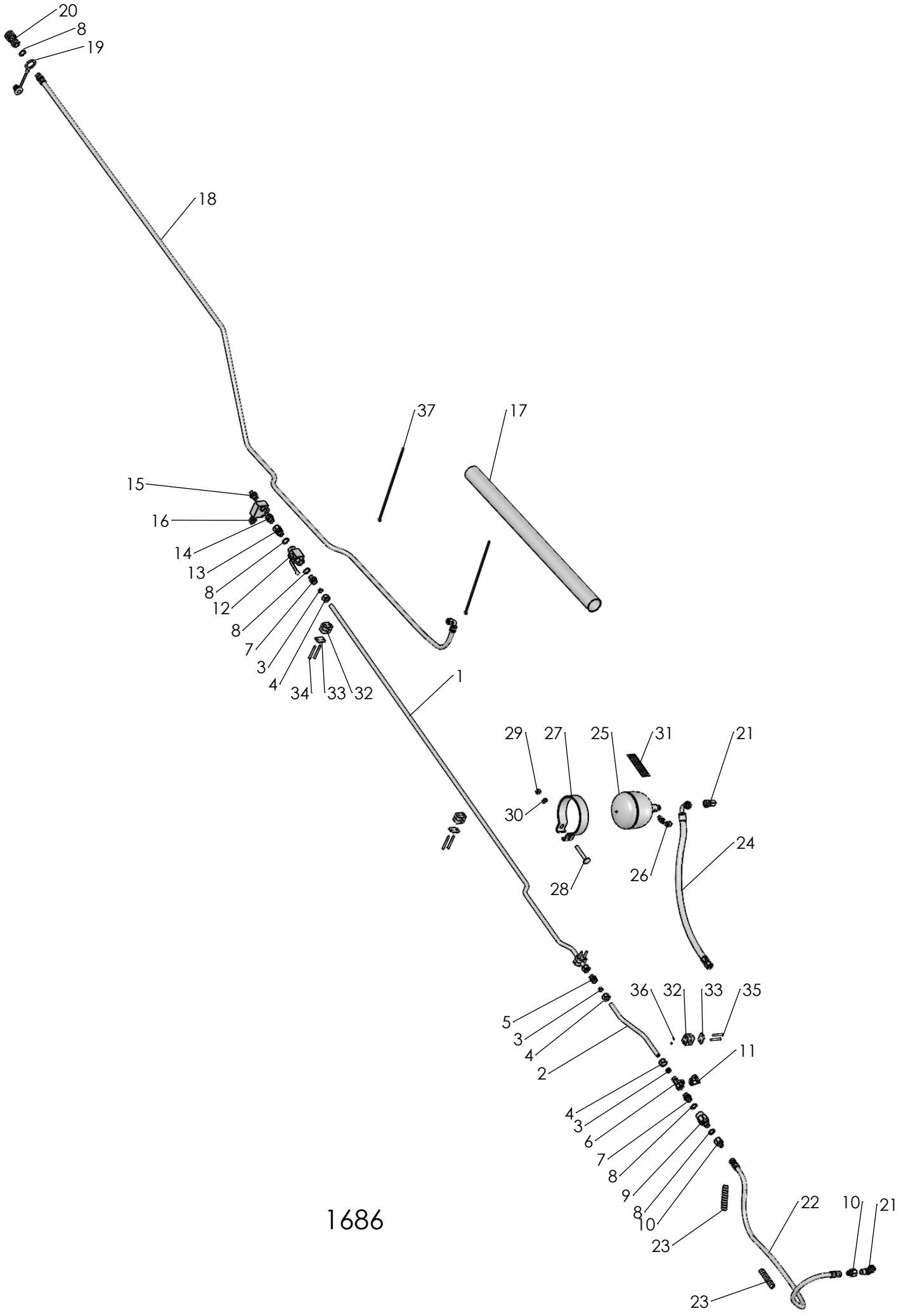


1686



2018-11-05

| Pos nr/ Ref No | Detalj nr/ Part No | Benämning | Description |
|---|---|---|---|
| **1686 Ö** | **37134** | **HYDRAULIK CXL** | **HYDRAULICS CXL** |
| 1 | 4165 98847 00 | Hydraulrör, L=2280 | Hydraulic tube, L=2280 |
| 2 | 4165 98849 00 | Hydraulrör, RH 15x2, L=300 | Hydraulic tube, RH 15x2, L=300 |
| 3 | 4165 75935 00 | Skärring Ø15 | Cutting ring Ø15 |
| 4 | 4165 75934 00 | Mutter, M22x1,5 | Nut, M22x1,5 |
| 5 | 4165 75953 00 | Rakadapt, M22 | Straight union, M22 |
| 6 | 4165 90630 00 | T-adapt M22x1,5 | T-Union M22x1,5 |
| 7 | 4165 75752 00 | Rakadapt 1/2"-M22 | Union 1/2"-M22 |
| 8 | 4165 80316 00 | Gummistålbricka, G1/2 | Bonded seal, G1/2 |
| 9 | 4165 31757 00 | Svivel, 1/2"-1/2" | Swivel connection, 1/2"-1/2" |
| 10 | 4165 92940 00 | Rak adapt | Straight Union |
| 11 | 4165 83050 00 | L-adapt, M22x1,5 | L-Union, M22x1,5 |
| 12 | 4165 94452 00 | Kulventil, 1/2" | Ball valve, 1/2" |
| 13 | 4165 92138 00 | Rakadapt, 1/2" - 1/2" | Union, 1/2" - 1/2" |
| 14 | 4165 65478 00 | Rak adapt 1/2" | Union |
| 15 | 4165 92438 00 | Rak adapt, 1/2" - 3/8" | Stright union |
| 16 | 4165 93010 00 | Sekvensventil | Sequens valve |
| 17 | 4165 21043 00 | Skyddsslang, Ø59,4/63x1000 | Protective hose, Ø59,4/63x1000 |
| 18 | 4165 27434 00 | Hydraulsslang, L=4150 | Hydraulic hose, L=4150 |
| 19 | 4165 29481 00 | Skyddsplugg 1/2", hona | Protection plug 1/2", female |
| 20 | 4165 74815 00 | Snabbkoppling hondel 1/2" | Quick coupling F 1/2" |
| 21 | 4165 77826 00 | L-adapt 1/2" | L-union 1/2" |
| 22 | 4165 93786 00 | Hydraulslang, L=1220 | Hydraulic hose, L=1220 |
| 23 | 4165 98919 00 | Plastspiral, L=100 | Plastic spiral, L=100 |
| 24 | 4165 99009 00 | Hydraulslang, L=790 | Hydraulic hose, L=790 |
| 25 | 4165 36250 50 | Ackumulator 1,4 l, 11 MPa | Accumulator 1,4 l, 11MPa |
| 26 | 4165 86496 00 | Mätnippel | Measure union |
| 27 | 4165 93755 50 | Ackumulatorfäste, Ø155 | Accumulator bracket, Ø155 |
| 28 | 4727 65 50 51 | Skruv MVBF 12x 90- 8.8 FZB | Bolt ISO 8677-M12x90-8.8 FZB |
| 29 | 4731 23 22 01 | Mutter M6M 12- 8 FZB | Nut ISO - 4032 - M12-8 FZB |
| 30 | 4734 11 78 01 | Bricka BRB 13x 24 FZB | Washer ISO 7089 - 12 FZB |
| 31 | 4165 97455 00 | Dekal: Ackumulator Agrolux (S,GB) | Decal: Accumulator Agrolux (S,GB) |
| 32 | 4165 91204 00 | Klammerpar, Ø15 | Tube clamps, Ø15 |
| 33 | 4165 91205 00 | Täckplatta 26 | Covering plate 26 |
| 34 | 4725 23 84 51 | Skruv M6S 6x 70- 8.8 FZB | Bolt ISO 4014 - M6 x 70-8.8 FZB |
| 35 | 4725 23 80 51 | Skruv M6S 6x 50- 8.8 FZB | Bolt ISO 4014 - M6 x 50-8.8 FZB |
| 36 | 4731 23 16 01 | Mutter M6M 6- 8 FZB | Nut ISO - 4032 - M6-8 FZB |
| 37 | 4165 12002 78 | Buntband svart, L=368 | Self-locking ties, L=368 |

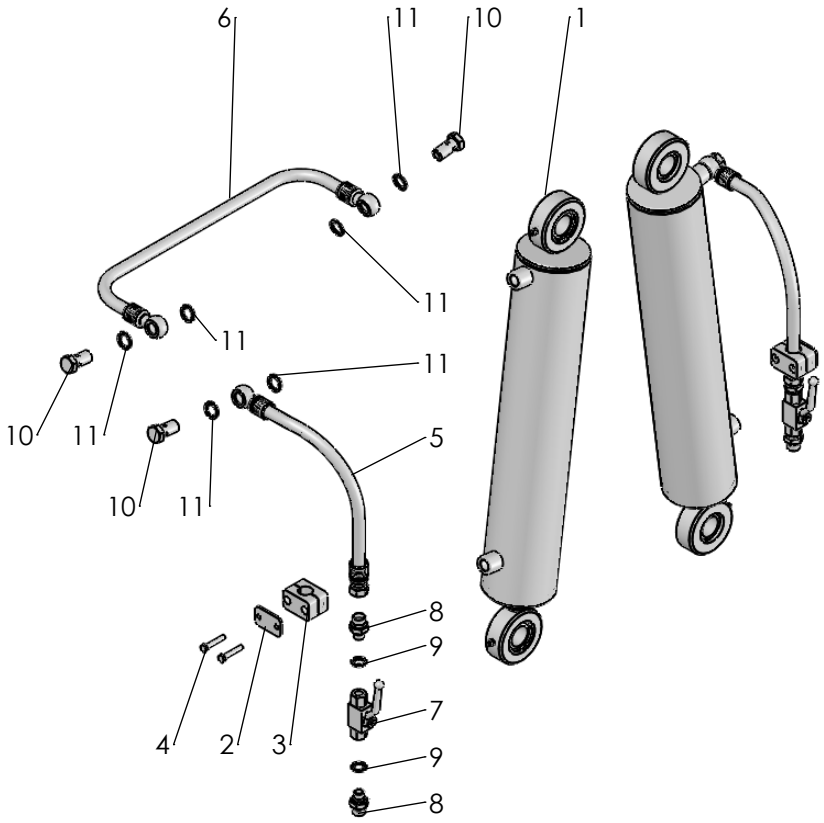


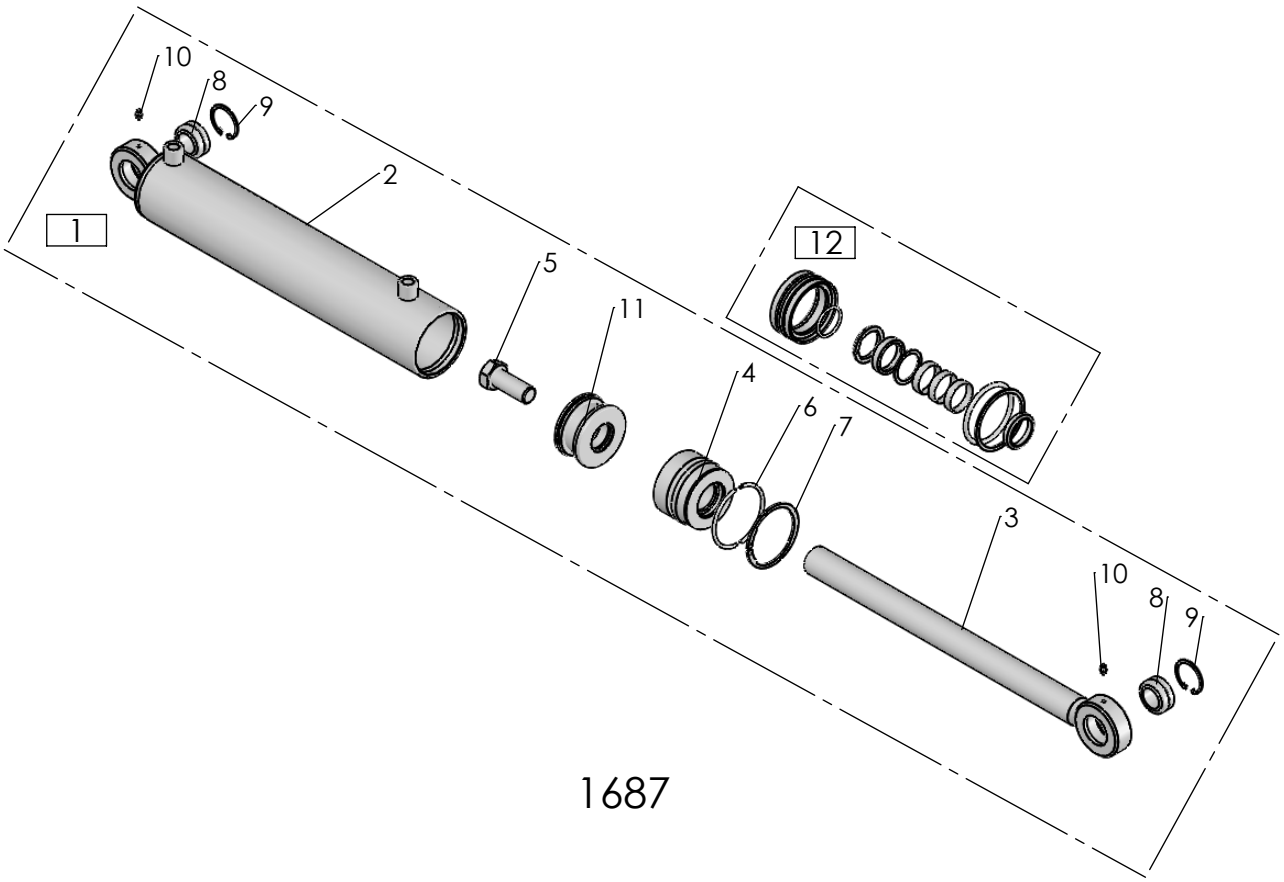


1687



2018-11-06

| Pos nr/ Ref No | Detalj nr/ Part No | Benämning | Description |
|---|---|---|---|
| **1687 Ö1** | **37129** | **VÄNDHYDRAULIK CXL** | **TURNING HYDRAULICS CXL** |
| 1 | 4165 95796 50 | Hydraulcylinder DV, Ø90/40x390 | Hydraulic cylinder DA, Ø90/40x390 |
| 2 | 4165 91853 00 | Täckplatta 33 | Cover plate 33 |
| 3 | 4165 93394 00 | Klammerpar, Ø20 | Tube clamp, Ø20 |
| 4 | 4725 23 76 51 | Skruv M6S 6x 35- 8.8 FZB | Bolt ISO 4014 - M6 x 35-8.8 FZB |
| 5 | 4165 95714 00 | Hydraulslang, L=450 | Hudraulic hose, L=450 |
| 6 | 4165 96023 00 | Hydraulslang, L=600 | Hydraulic hose, L=600 |
| 7 | 4165 84096 00 | Kulventil, ISO-G1/4 | Ball valve, ISO-G1/4 |
| 8 | 4165 93574 00 | Rak adapt, 3/8" - 1/4" | Stright union, 3/8"-1/4" |
| 9 | 4165 12983 01 | Gummistålbricka, G1/4" | Bonded seal, G1/4 |
| 10 | 4165 95774 00 | Banjoskruv 3/8" | Banjo bolt 3/8" |
| 11 | 4165 94417 00 | Gummistålbricka, G3/8 | Bonded seal, G3/8 |

| Pos nr/ Ref No | Detalj nr/ Part No | Benämning | Description |
|---|---|---|---|
| | **95796** | **VÄNDCYLINDER CXL** | **TURNING CYLINDER CXL** |
| 1 | 4165 95796 50 | Hydraulcylinder DV, Ø90/40x390 | Hydraulic cylinder DA, Ø90/40x390 |
| 2 | 4165 95797 50 | Cylinderrör Ø90, kompl | Cylinder jacket Ø90, cpl |
| 3 | 4165 95799 50 | Kolvstång Ø40, kompl | Piston rod Ø40, cpl |
| 4 | 4165 95802 00 | Styrning, Ø90/40 | Guide, Ø90/40 |
| 5 | 4725 27 20 51 | Skruv M6S 24x60- 8.8 FZB | Bolt ISO 4014 - M24 x 60 |
| 6 | 4165 95805 00 | Låsringshalvor för cyl Ø90 | Locking ring for cyl Ø90 |
| 7 | 4735 31 58 61 | Spårring AV 85 FZB | Retaining ring AV 85 FZB |
| 8 | 4165 86405 02 | Ledlager, Ø30 | Spherical plain bearing, Ø30 |
| 9 | 4735 31 40 11 | Spårring SgH 47 FZB | Circlip DIN 472 - 47 x 1.75 |
| 10 | 4738 88 10 01 | Smörjnippel, AH M6 FZB | Grease nipple, AH M6 FZB |
| 11 | 4165 95801 00 | Kolv, Ø90 | Piston, Ø90 |
| 12 | 4165 96358 00 | Packningssats till cyl Ø90/40 | Kit of sealings for cyl Ø90/40 |

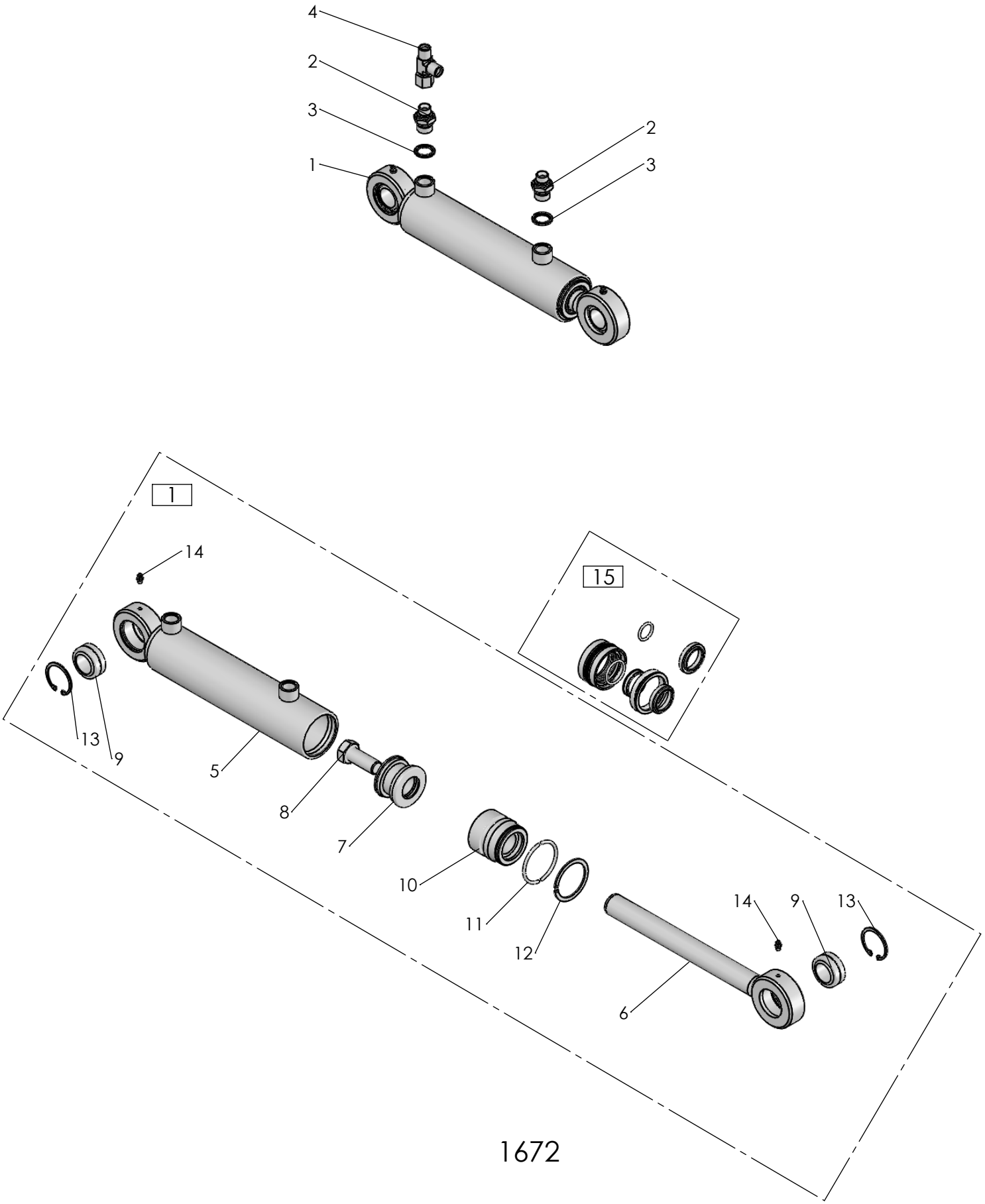


1672



2018-10-26

| Pos nr/ Ref No | Detalj nr/ Part No | Benämning | Description |
|---|---|---|---|
| **1672 Ö** | **36790** | **HYDRAULISK FÖRSTA TILTAS JUSTERING** | **HYDRAULIC FIRST FURROW ADJUSTMENT** |
| 1 | 4165 94371 50 | Hydraulcylinder DV, Ø63/32x190 | Hydraulic cylinder DA, Ø63/32x190 |
| 2 | 4165 92438 00 | Rak adapt, 1/2" - 3/8" | Stright union |
| 3 | 4165 80316 00 | Gummistålbricka, G1/2 | Bonded seal, G1/2 |
| 4 | 4165 93968 00 | T-adapt | T-Union |
| 5 | 4165 94415 50 | Cylinderrör Ø63/73, kompl. | Cylinder tube Ø63/73, cpl |
| 6 | 4165 94412 50 | Kolvstång Ø32, kompl | Piston rod Ø32, cpl |
| 7 | 4165 86556 00 | Kolv, Ø63 | Piston, Ø63 |
| 8 | 4725 26 74 51 | Skruv M6S 20x 50- 8.8 FZB | Bolt ISO 4014 - M20 x 50-8.8 FZB |
| 9 | 4165 86405 02 | Ledlager, Ø30 | Spherical plain bearing, Ø30 |
| 10 | 4165 86558 00 | Styrning, Ø63/32 | Guide, Ø63/32 |
| 11 | 4165 86550 00 | Låsringshalvor för cyl Ø63 | Locking halfs for cyl Ø63 |
| 12 | 4735 31 46 61 | Spårring AV 58 FZB | Retaining ring AV 58 FZB |
| 13 | 4735 31 40 11 | Spårring SgH 47 FZB | Circlip DIN 472 - 47 x 1.75 |
| 14 | 4738 88 10 01 | Smörjnippel, AH M6 FZB | Grease nipple, AH M6 FZB |
| 15 | 4165 86984 00 | Packningssats, cyl Ø63/32 | Kit of seals, cyl Ø63/32 |

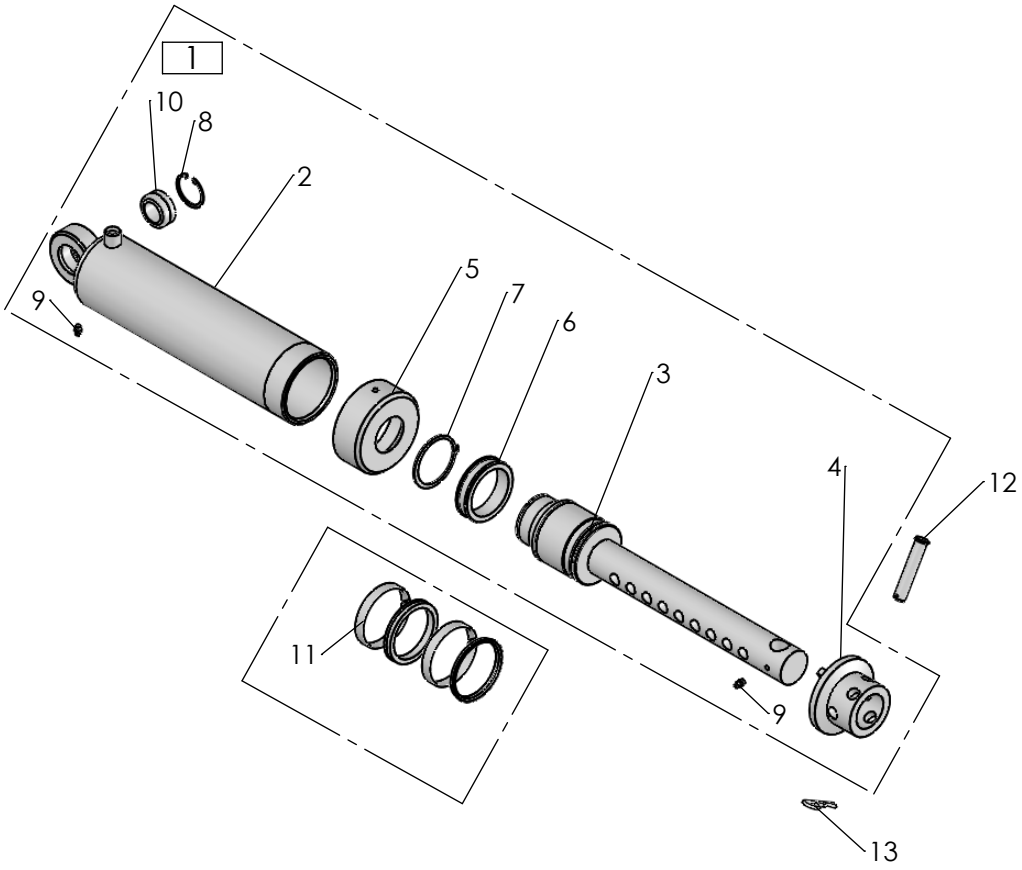


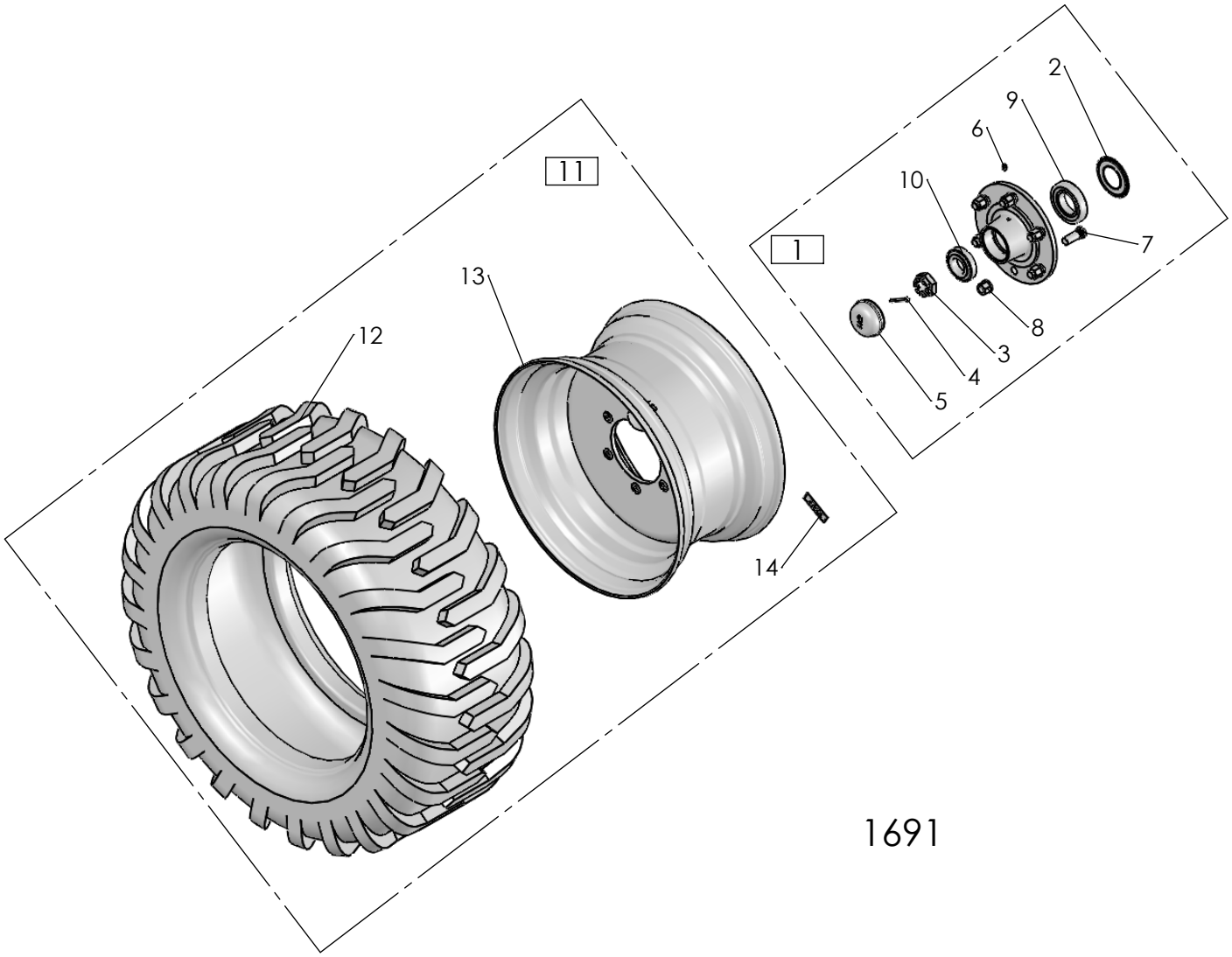


1691



2018-11-07

| Pos nr/ Ref No | Detalj nr/ Part No | Benämning | Description |
|---|---|---|---|
| **1691 Ö1** | **20217** | **BAKHJULSCYLINDER** | **REAR WHEEL CYLINDER** |
| 1 | 4165 96884 50 | Hydraulcylinder EV, Ø90/40x260 | Hydraulic cylinder SA, Ø90/40x260 |
| 2 | 4165 98545 50 | Cylinderrör Ø90, kompl | Cylinder tube Ø90, cpl |
| 3 | 4165 98540 50 | Kolvstång Ø90 EV, komplett | Piston rod Ø90 SA, cpl |
| 4 | 4165 91849 50 | Stoppring | Stop ring |
| 5 | 4165 91248 50 | Mantelring, M105x2 | Cylinder jacket ring, M105x2 |
| 6 | 4165 91268 00 | Packningshållare | Seal retainer |
| 7 | 4735 31 52 01 | Spårring SgA 70 FZB | Circlip DIN 471 - 70 x 2.5 |
| 8 | 4735 31 40 11 | Spårring SgH 47 FZB | Circlip DIN 472 - 47 x 1.75 |
| 9 | 4738 88 20 03 | Smörjnippel, AM 8x1,25 FZB | Grease nipple, AM 8x1,25 FZB |
| 10 | 4165 86405 02 | Ledlager, Ø30 | Spherical plain bearing, Ø30 |
| 11 | 4165 93074 00 | Packningssats till cylinder 91846 | Sealing kit for cylinder 91846 |
| 12 | 4165 91848 00 | Cylindrisk bult, Ø16x85 | Headed clevis pin, Ø16x85 |
| 13 | 4165 85763 00 | Hårnålssprint, Ø3,5 | Cotter pin, Ø3,5 |

| Pos nr/ Ref No | Detalj nr/ Part No | Benämning | Description |
|---|---|---|---|
| **1691 Ö2** | | **HJUL OCH NAV** | **WHEEL AND HUB** |
| 1 | 4165 23700 50 | Hjulnav FAD 3A572 | Wheel hub FAD 3A572 |
| 2 | 4165 23693 00 | Tätningsbricka FAD, Ø101/55 | Sealing washer |
| 3 | 4165 23697 00 | Kronmutter, M33x2 | Castel nut, M33x2 |
| 4 | 4721 62 33 01 | Saxpinne SP 6.3x 50 FZB | Split pin ISO 1234-6.3x50 FZB |
| 5 | 4165 23696 00 | Navkapsel FAD, Ø80 | Hub cap FAD, Ø80 |
| 6 | 4738 88 20 03 | Smörjnippel, AM 8x1,25 FZB | Grease nipple, AM 8x1,25 FZB |
| 7 | 4165 98744 00 | Navskruv, M18x1,5x50 | Hub screw, M18x1,5x50 |
| 8 | 4165 91417 00 | Navmutter, M18x1,5 sfär R16 | Hub nut, M18x1,5 sphere R16 |
| 9 | 4738 42 11 00 | Taper roller bearing, 30211 | Taper roller bearing, 30211 |
| 10 | 4738 42 08 00 | Koniskt rullager, 30208 | Taper roller bearing, 30208 |
| 11 | 4165 90943 00 | Hjul kompl 400/55-22.5 | Wheel compl 400/55-22.5 |
| 12 | 4165 90945 00 | Däck, 400/55-22,5 | Tire, 400/55-22,5 |
| 13 | 4165 90944 50 | Fälg för däck 400/55-22.5 | Rim for tyre 400/55-22.5 |
| 14 | 4165 17122 00 | Dekal: Däcktryck 150kPa | Decal: Tyre pressure 150 kPa |

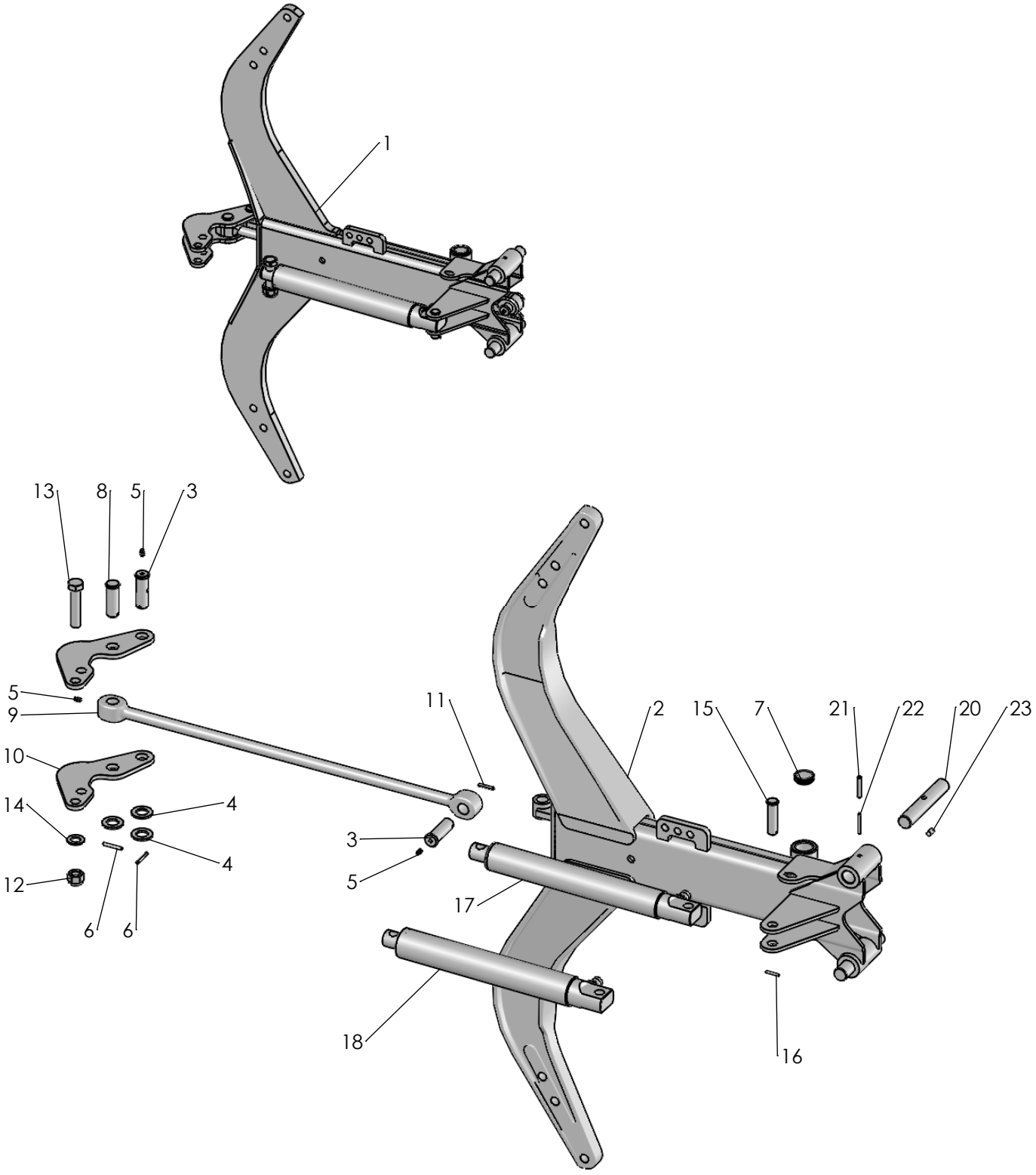


1429



2018-11-07

| Pos nr/ Ref No | Detalj nr/ Part No | Benämning | Description |
|---|---|---|---|
| **1429 Ö** | | **ÅS, AUTOMATISK** | **BEAM, AUTOMATIC** |
| 1 | 4165 86043 90 | Ås, komplett, låg automat Överum | Beam short Överum |
| 2 | 4165 96112 90 | Automatås hög (800) | Beam (800) |
| 3 | 4165 86079 00 | Tapp för åskomponent | Pin for beam |
| 4 | 4734 12 00 01 | Bricka BRB 26x 45 FZB | Washer 26x45-200 HV |
| 5 | 4738 88 20 03 | Smörjnippel, AM 8x1,25 FZB | Grease nipple, AM 8x1,25 FZB |
| 6 | 4721 43 48 01 | Fjädrande rörpinne FRP 6x 45 FZB | Spring Pin ISO 8752 - 6 x 45 FZB |
| 7 | 4165 23869 00 | Skyddsplugg, Ø37-40,4 | Protective cap, Ø37-40,4 |
| 8 | 4165 25914 00 | Cylindrisk bult, Ø25x73 | Clevis pin, Ø25x73 |
| 9 | 4165 25902 50 | Dragstång L=843 | Draw rod, L=843 |
| 10 | 4165 21555 90 | Hävarm (bumerang) Överum | Walking beam Överum |
| 11 | 4721 43 46 01 | Fjädrande rörpinne FRP 6x 36 FZB | Spring Pin ISO 8752 - 6 x 36 FZB |
| 12 | 4165 03650 07 | Mutter M6M 20 NF-10 MW | Nut ISO-7040-M20-10 MW |
| 13 | 4165 91945 00 | Skruv M6S 20x 95-10.9 MW | Bolt M6S 20x 95-10.9 MW |
| 14 | 4734 11 92 01 | Bricka BRB 21x 37 FZB | Washer ISO 7089-M20-200 HV |
| 15 | 4165 72399 01 | Cylindrisk bult, Ø20x75,5 | Headed clevis pin, Ø20x75,5 |
| 16 | 4721 42 62 01 | Fjädrande rörpinne FRP 4x 32 FZB | Spring Pin ISO 8752 - 4 x 32 FZB |
| 17 | 4165 21550 50 | Hydraulcylinder EV, Ø50/38x293 | Hydraulic cylinder SA, Ø50/38x293 |
| 18 | 4165 26350 50 | Hydraulcylinder EV, Ø55x35x293 | Hydraulic cylinder SA, Ø55x35x293 |
| 19 | 4165 25902 50 | Dragstång L=843 | Draw rod, L=843 |
| 20 | 4165 86044 00 | Tapp, Ø30x175 | Pin, Ø30x175 |
| 21 | 4721 43 85 10 | Fjädrande rörpinne FRP 8x 50 MW | Spring Pin ISO 8752 - 8 x 50 MW |
| 22 | 4721 43 18 10 | Fjädrande rörpinne FRP 5x 50 MW | Spring Pin ISO 8752 - 5 x 50 MW |
| 23 | 4165 98096 00 | Cylindrisk pinne CPK m6 10x20 | Cylindrical pin CPK m6 10x20 |

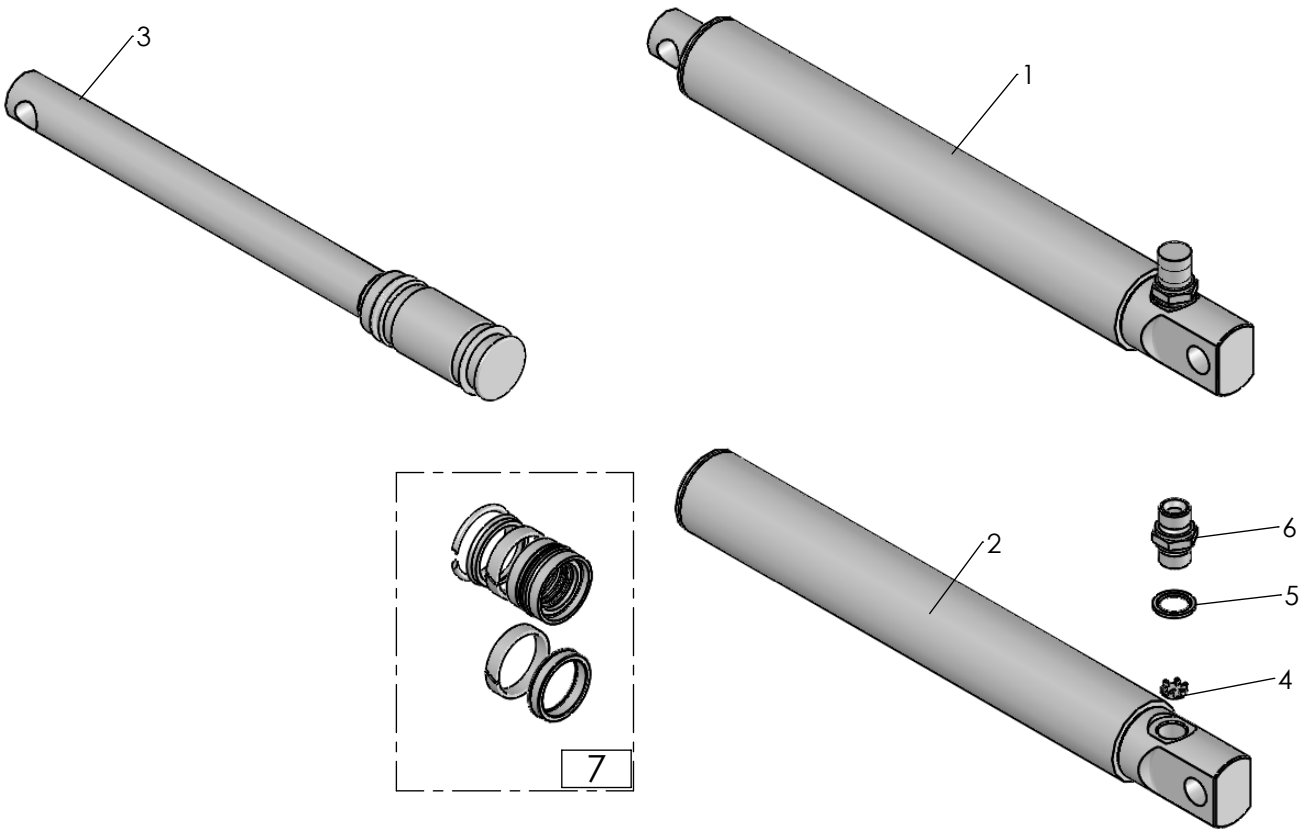


1280

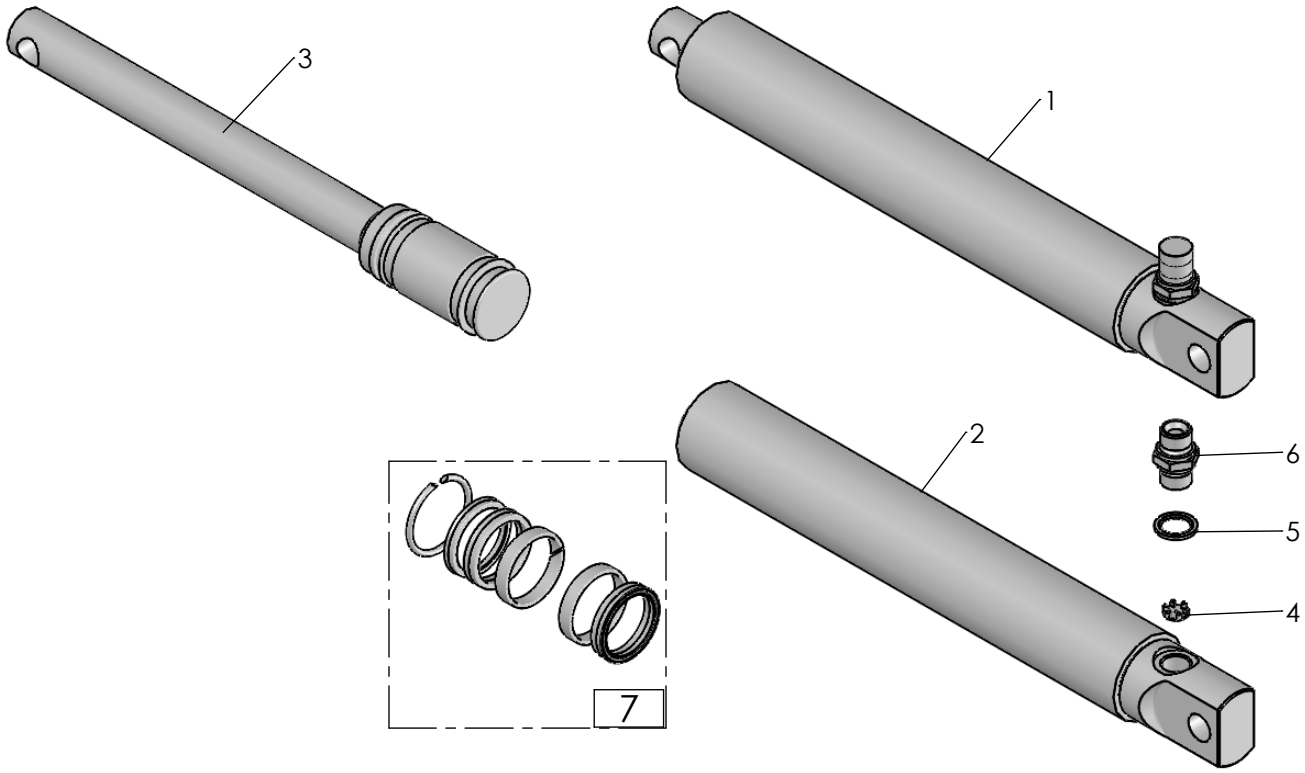


1281

2018-08-27

| Pos nr/ Ref No | Detalj nr/ Part No | Benämning | Description |
|---|---|---|---|
| **1280 Ö** | | **HYDRAULISK STENSÄKRINGSCYLINDER Ø50** | **HYDRAULIC STONE TRIP CYLINDER Ø50** |
| 1 | 4165 21550 50 | Hydraulcylinder EV, Ø50/38x293 | Hydraulic cylinder SA, Ø50/38x293 |
| 2 | 4165 21551 50 | Cylinderrör, Ø50 | Cylinder tube, Ø50 |
| 3 | 4165 23802 50 | Kolvstång, komplett Ø50 | Piston rod Ø50, cpl |
| 4 | 4165 77852 00 | Ventilkägla, Ø2,2 | Restrictor valve, Ø2,2 |
| 5 | 4165 80316 00 | Gummistålbricka, G1/2 | Bonded seal, G1/2 |
| 6 | 4165 80317 00 | Rak adapt, 1/2-1/2 | Union |
| 7 | 4165 86256 00 | Packningssats cyl Ø50 | Sealing kit for cyl Ø50 |

| Pos nr/ Ref No | Detalj nr/ Part No | Benämning | Description |
|---|---|---|---|
| **1281 Ö** | | **HYDRAULISK STENSÄKRINGSCYLINDER Ø55** | **HYDRAULIC STONE TRIP CYLINDER Ø55** |
| 1 | 4165 26350 50 | Hydraulcylinder EV, Ø55x35x293 | Hydraulic cylinder SA, Ø55x35x293 |
| 2 | 4165 26453 50 | Cylinderrör, Ø55/65, kompl | Cylinder tube, Ø55/65 |
| 3 | 4165 26455 50 | Kolvstång Ø55, komplett | Piston rod Ø55, cpl |
| 4 | 4165 77852 00 | Ventilkägla, Ø2,2 | Restrictor valve, Ø2,2 |
| 5 | 4165 80316 00 | Gummistålbricka, G1/2 | Bonded seal, G1/2 |
| 6 | 4165 80317 00 | Rak adapt, 1/2-1/2 | Union |
| 7 | 4165 26459 00 | Packningssats till 26350 | Sealing kit for 26350 |

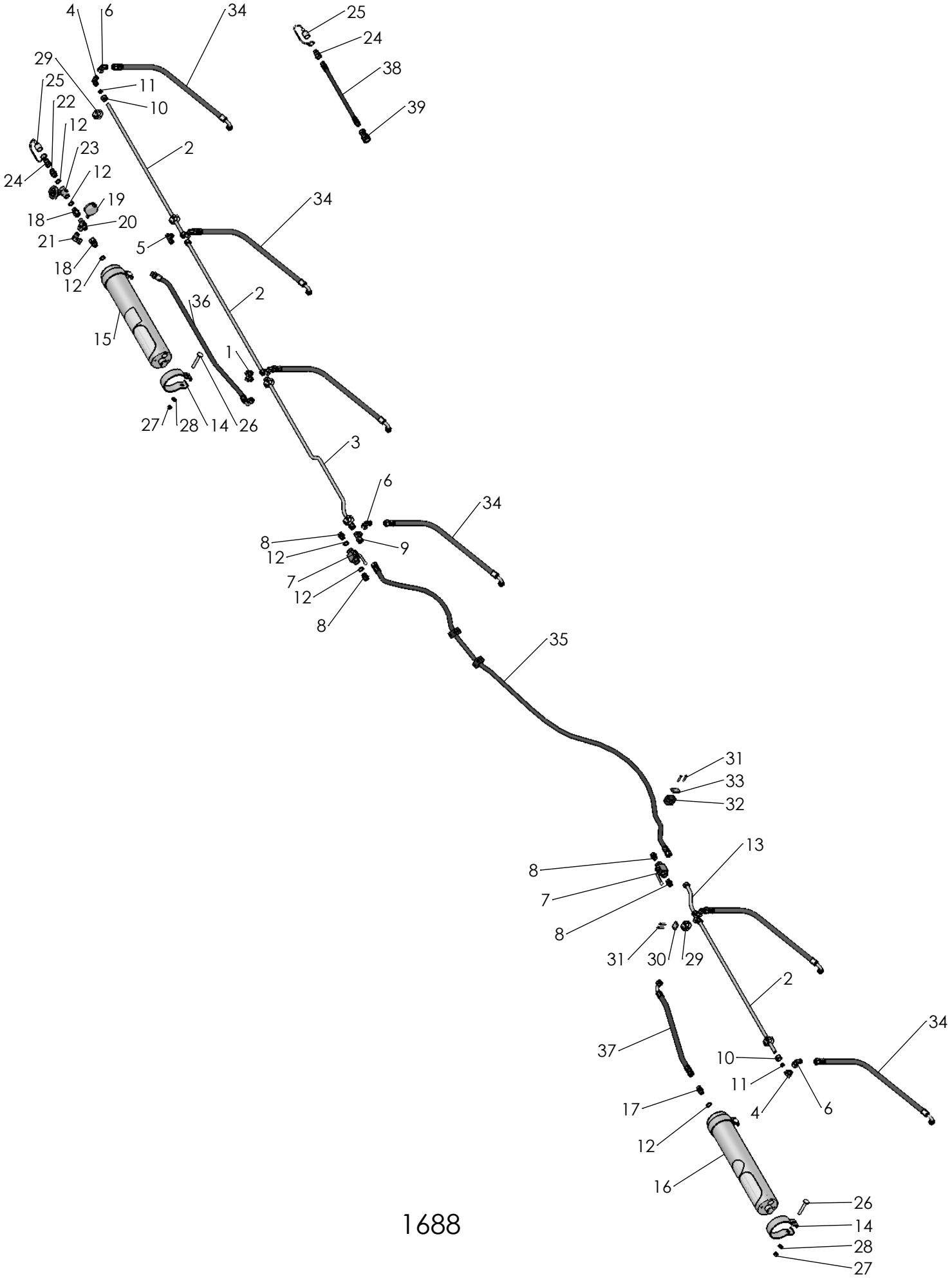


1688



2018-11-06

| Pos nr/ Ref No | Detalj nr/ Part No | Benämning | Description |
|---|---|---|---|
| **1688 Ö** | **37127** | **STENSÄKRINGSHYDRAULIK CXL** | **STONE TRIP HYDRAULICS CXL** |
| 1 | 4165 75928 00 | X-adapt, M22x1,5 | X-union, M22x1,5 |
| 2 | 4165 86276 00 | Hydraulrör, RH 15x2, L= 958 | Hydraulic tube, RH 15x2, L= 958 |
| 3 | 4165 20021 00 | Hydraulrör | Hydraulic tube |
| 4 | 4165 75747 00 | L-adapt, M22x1,5 | L-union, M22x1,5 |
| 5 | 4165 75746 00 | T-adapt, M22x1,5 | T-union, M22x1,5 |
| 6 | 4165 83050 00 | L-adapt, M22x1,5 | L-Union, M22x1,5 |
| 7 | 4165 94452 00 | Kulventil, 1/2" | Ball valve, 1/2" |
| 8 | 4165 75752 00 | Rakadapt 1/2"-M22 | Union 1/2"-M22 |
| 9 | 4165 90630 00 | T-adapt M22x1,5 | T-Union M22x1,5 |
| 10 | 4165 75934 00 | Mutter, M22x1,5 | Nut, M22x1,5 |
| 11 | 4165 75935 00 | Skärring Ø15 | Cutting ring Ø15 |
| 12 | 4165 80316 00 | Gummistålbricka, G1/2 | Bonded seal, G1/2 |
| 13 | 4165 92133 00 | Hydraulrör | Hydraulic pipe |
| 14 | 4165 33039 50 | Ackumulatorfäste, Ø117 | Ackumulator bracket, Ø117 |
| 15 | 4165 91938 50 | Kolvackumulator 4l 9MPa, med dekal | Piston accumulator 4l 9MPa, with decal |
| 16 | 4165 95443 50 | Kolvackumulator 4l 12MPa, med dekal | Piston accumulator 4l 12MPa with decal |
| 17 | 4165 80317 00 | Rak adapt, 1/2-1/2 | Union |
| 18 | 4165 92138 00 | Rakadapt, 1/2" - 1/2" | Union, 1/2" - 1/2" |
| 19 | 4165 80750 00 | Manometer | Pressure gauge |
| 20 | 4165 77838 00 | T-adapt 1/2" | T-union 1/2" |
| 21 | 4165 77826 00 | L-adapt 1/2" | L-union 1/2" |
| 22 | 4165 65478 00 | Rak adapt 1/2" | Union |
| 23 | 4165 73057 00 | Avstängningsventil (nålventil) | Shut of valve |
| 24 | 4165 74814 00 | Handel 1/2" | Quick coupling M, 1/2" |
| 25 | 4165 78383 00 | Handelsskydd | Protective cap |
| 26 | 4727 65 50 51 | Skruv MVBF 12x 90- 8.8 FZB | Bolt ISO 8677-M12x90-8.8 FZB |
| 27 | 4731 23 22 01 | Mutter M6M 12- 8 FZB | Nut ISO - 4032 - M12-8 FZB |
| 28 | 4734 11 78 01 | Bricka BRB 13x 24 FZB | Washer ISO 7089 - 12 FZB |
| 29 | 4165 91204 00 | Klammerpar, Ø15 | Tube clamps, Ø15 |
| 30 | 4165 91205 00 | Täckplatta 26 | Covering plate 26 |
| 31 | 4725 23 76 51 | Skruv M6S 6x 35- 8.8 FZB | Bolt ISO 4014 - M6 x 35-8.8 FZB |
| 32 | 4165 94291 00 | Klammerpar, Ø20 | Tube clamps, Ø20 |
| 33 | 4165 91853 00 | Täckplatta 33 | Cover plate 33 |
| 34 | 4165 98851 00 | Hydraulslang. L=690 | Hydraulic hose, L=690 |
| 35 | 4165 20033 00 | Hydraulslang 1/2, L=2700 | Hydraulic hose 1/2, L=2700 |
| 36 | 4165 20513 00 | Hydraulslang 1/2, L= 1050 | Hydraulic hose 1/2, L=1050 |
| 37 | 4165 93524 00 | Hydraulslang 1/2, L=500 | Hydraulic hose 1/2, L=500 |
| 38 | 4165 20253 00 | Hydraulslang, L=5000 | Hydraulik hose, L=5000 |
| 39 | 4165 74815 00 | Snabbkoppling hondel 1/2" | Quick coupling F 1/2" |

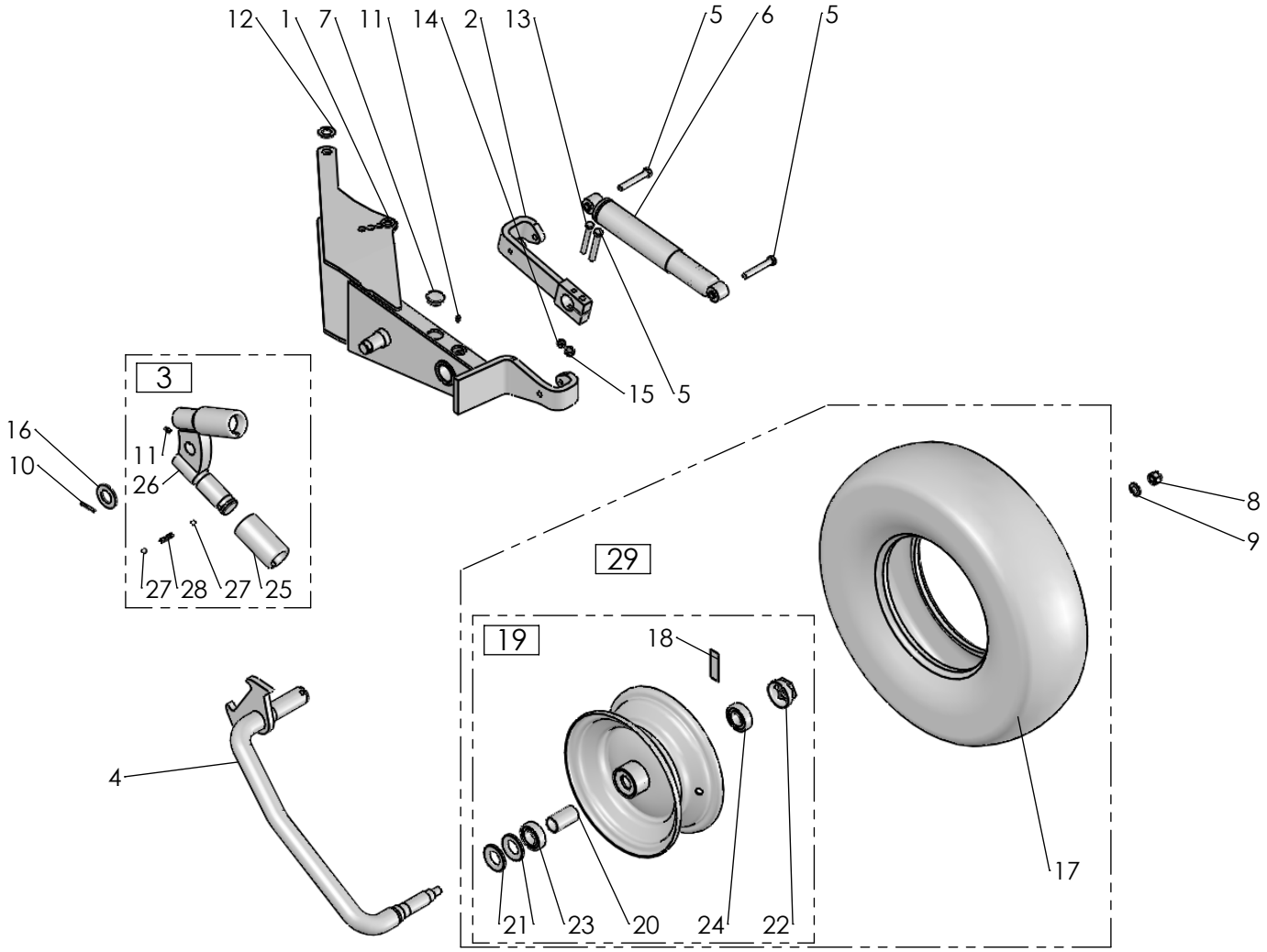


1614



2018-09-28

| Pos nr/ Ref No | Detalj nr/ Part No | Benämning | Description |
|---|---|---|---|
| **1614 Ö** | **4165 91120-92** | **PENDELHJUL GUMMI** | **PENDELUM WHEEL RUBBER** |
| 1 | 4165 90175 90 | Konsol | Bracket |
| 2 | 4165 97270 90 | Arm | Arm |
| 3 | 4165 94946 00 | Spärrkläpp | Catch cpl. |
| 4 | 4165 93864 90 | Hjulaxel | Wheel axle |
| 5 | 4725 25 48 81 | Skruv M6S 12x 80-10.9 MW | Bolt ISO 4014 - M12 x 80-10.9 MW |
| 6 | 4165 86340 00 | Stötdämpare | Shock absorber |
| 7 | 4165 97372 00 | Skyddsplugg, Ø34-38 | Protective cap, Ø34-38 |
| 8 | 4732 21 24 51 | Mutter M6M 16- 8 NF FZB | Nut ISO 7040-M16-8-NF FZB |
| 9 | 4734 11 86 01 | Bricka BRB 17x30 FZB | Washer ISO 7089 - 16 |
| 10 | 4721 43 47 01 | Fjädrande rörpinne FRP 6x 40 FZB | Spring Pin ISO 8752 - 6 x 40 FZB |
| 11 | 4738 88 20 03 | Smörjnippel, AM 8x1,25 FZB | Grease nipple, AM 8x1,25 FZB |
| 12 | 4734 11 92 01 | Bricka BRB 21x 37 FZB | Washer ISO 7089-M20-200 HV |
| 13 | 4725 25 07 51 | Skruv M6S 10x 80- 8.8 FZB | Bolt ISO 4014-M10x80-8.8 FZB |
| 14 | 4731 23 20 01 | Mutter M6M 10- 8 FZB | Nut Hexagon Nut ISO - 4032 - M10-8 FZB |
| 15 | 4731 23 22 51 | Mutter M6M 12-10 MW | Nut ISO 4032-M12-10 MW |
| 16 | 4734 12 04 01 | Bricka BRB 31x 56 FZB | Washer ISO 7089 - 30 |
| 17 | 4165 93319 00 | Däck, 200/95-12 | Tyre, 200/95-12 |
| 18 | 4165 99369 00 | Dekal: Däcktryck 300kPa | Decal: Tyre pressure 300kPa |
| 19 | 4165 93321 50 | Fälg med nav, 4.25x12 | Rim with hub, 4.25x12 |
| 20 | 4165 93470 00 | Hylsa, Ø31/35x64,2 | Sleeve, Ø31/35x64,2 |
| 21 | 4165 93473 00 | Z-lamell, Z 007 | Z-lamell, Z 007 |
| 22 | 4165 93469 00 | Navkapsel Hadsten nr 928 | Hub cap Hadsten no 928 |
| 23 | 4738 22 06 19 | Kullager 6206-2RS1 | Ballbearing 6206-2RS1 |
| 24 | 4738 23 05 34 | Kullager 6305-2RS1 | Ballbearing, 6305-2RS1 |
| 25 | 4165 94949 00 | Hylsa | Sleeve |
| 26 | 4165 94947 00 | Kläpp | Catch |
| 27 | 4738 61 32 02 | Kula | Ball |
| 28 | 4165 83046 00 | Tryckfjäder | Push Spring |
| 29 | 4165 36252 51 | Hjul 200/95-12, kompl | Wheel 200/95-12, cpl |
| 30 | 4165 93321 50 | Fälg med nav, 4.25x12 | Rim with hub, 4.25x12 |

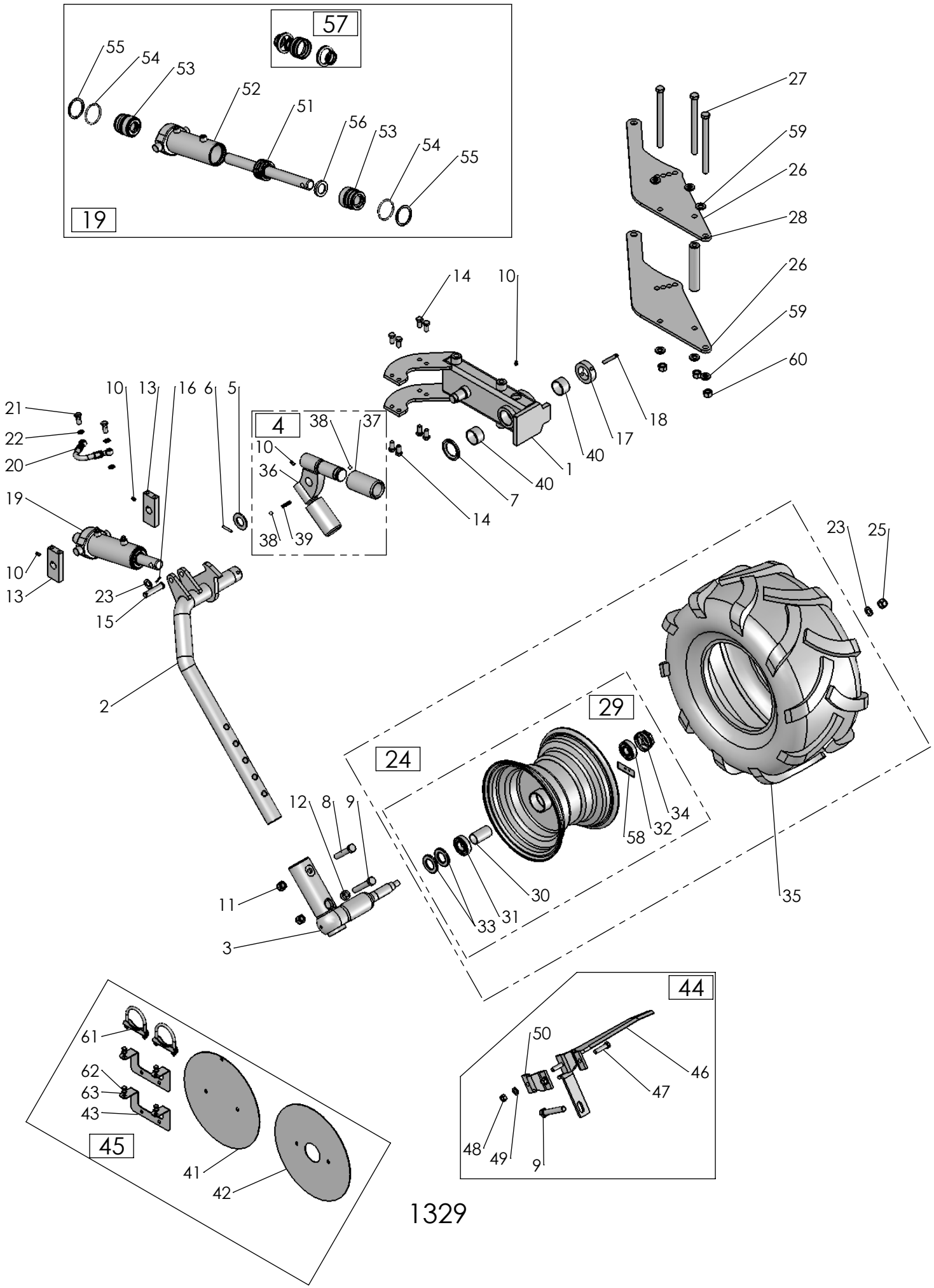


1329



2018-11-21

| Pos nr/Ref No | Detalj nr/Part No | Benämning | Description |
|---|---|---|---|
| **1329 Ö** | | **PENDELHJUL** | **PENDULUM WHEEL** |
| 1 | 4165 34040 90 | Pendelhjulskonsol | Pendeliumwheel bracket |
| 2 | 4165 34039 90 | Hjularm | Pendelum arm |
| 3 | 4165 28181 90 | Montage stubbaxel | Montage axle |
| 4 | 4165 94946 00 | Spärrkläpp | Catch cpl. |
| 5 | 4734 12 04 01 | Bricka BRB 31x 56 FZB | Washer ISO 7089 - 30 |
| 6 | 4721 43 47 01 | Fjädrande rörpinne FRP 6x 40 FZB | Spring Pin ISO 8752 - 6 x 40 FZB |
| 7 | 4165 28530 00 | Bricka | Washer |
| 8 | 4725 26 38 81 | Skruv M6S 16x 90-10.9 MW | Bolt ISO 4014 - M16 x 90-10.9 MW |
| 9 | 4725 26 40 81 | Skruv M6S 16x100-10.9 MW | Bolt ISO 4014 M16x100 -10.9 MW |
| 10 | 4738 88 20 03 | Smörjnippel, AM 8x1,25 FZB | Grease nipple, AM 8x1,25 FZB |
| 11 | 4165 03650 05 | Mutter M6M 16 NF-10 MW | Nut ISO 7040-M16-10 MW |
| 12 | 4165 91406 00 | Hylsa, 16,5/28x14 | Sleeve, 16,5/28x14 |
| 13 | 4165 33838 00 | Mellanplåt | Middleplate |
| 14 | 4725 25 34 51 | Skruv M6S 12x 25- 8.8 FZB | Bolt ISO 4014 - M12 x 25-8.8 FZB |
| 15 | 4165 89789 00 | Cylindrisk bult, Ø16x75 | Headed clevis pin, Ø16x75 |
| 16 | 4721 42 62 01 | Fjädrande rörpinne FRP 4x 32 FZB | Spring Pin ISO 8752 - 4 x 32 FZB |
| 17 | 4165 34150 00 | Stoppring Ø70/45X20 | Stopring Ø70/45X20 |
| 18 | 4721 44 27 01 | Fjädrande rörpinne FRP 10x 80 FZB | Spring Pin ISO 8752 - 10 x 80 FZB |
| 19 | 4165 32941 50 | Hydraulcylinder Dämpare, Ø63/32x79 | Hydraulic cylinder Absorber, Ø63/32x79 |
| 20 | 4165 34041 00 | Hydraulslang 1/4" 1/4" banjo L=150 | Hose 1/4" 1/4" banjo L=150 |
| 21 | 4165 23339 00 | Banjoskruv 1/4" L=28 | Banjo bolt |
| 22 | 4165 12983 01 | Gummistålbricka, G1/4" | Bonded seal, G1/4 |
| 23 | 4734 11 86 01 | Bricka BRB 17x30 FZB | Washer ISO 7089 - 16 |
| 24 | 4165 36249 52 | Hjul 26x12.00-12, kompl | Wheel 26x12.00-12, cpl |
| 25 | 4732 21 24 51 | Mutter M6M 16- 8 NF FZB | Nut ISO 7040-M16-8-NF FZB |
| 26 | 4165 97333 90 | Sida för bultning | Sideplate |
| 27 | 4165 90856 00 | Skruv M16x215-12.9 MW | Bolt M16x215-12.9 MW |
| 28 | 4165 98372 40 | Hylsa, Ø16/32x168 | Sleeve, Ø16/32x168 |
| 29 | 4165 28736 50 | Fälg med nav, 9.00x12 | Rim whith hub, 9.00x12 |
| 30 | 4165 93470 00 | Hylsa, Ø31/35x64,2 | Sleeve, Ø31/35x64,2 |
| 31 | 4738 22 06 19 | Kullager 6206-2RS1 | Ballbearing 6206-2RS1 |
| 32 | 4738 23 05 34 | Kullager 6305-2RS1 | Ballbearing, 6305-2RS1 |
| 33 | 4165 93473 00 | Z-lamell, Z 007 | Z-lamell, Z 007 |
| 34 | 4165 93469 00 | Navkapsel Hadsten nr 928 | Hub cap Hadsten no 928 |
| 35 | 4165 28126 00 | Däck, 26x12.00-12 | Tyre, 26x12.00-12 |
| 36 | 4165 94947 00 | Kläpp | Catch |
| 37 | 4165 94949 00 | Hylsa | Sleeve |
| 38 | 4738 61 32 02 | Kula | Ball |
| 39 | 4165 83046 00 | Tryckfjäder | Push Spring |
| 40 | 4165 94535 00 | Glidlager, Ø45/50x30 | Slide bearing, Ø45/50x30 |
| 41 | 4165 28743 50 | Fälgsida inner | Rim plate inner |
| 42 | 4165 28744 50 | Fälgsida ytter | Rim plate outer |
| 43 | 4165 36614 00 | Hållare svetsning | Bracket welded |
| 44 | 4165 30309 00 | Skrapa komp till hjul 28194, 34500, 36012 | Scraper to wheel 28194, 34500, 36012 |
| 45 | 4165 36264 01 | Fälgsidor, sats | Rim sides, kit |
| 46 | 4165 30305 40 | Skrapa | Scraper |
| 47 | 4725 25 42 51 | Skruv M6S 12x 50- 8.8 FZB | Bolt ISO 4014 - M12 x 50-8.8 FZB |
| 48 | 4731 23 22 01 | Mutter M6M 12- 8 FZB | Nut ISO - 4032 - M12-8 FZB |
| 49 | 4734 11 78 01 | Bricka BRB 13x 24 FZB | Washer ISO 7089 - 12 FZB |
| 50 | 4165 94538 40 | Fästplåt | Bracket plate |
| 51 | 4165 34189 50 | Kolvstång Ø32, kompl | Piston rodØ32, cpl |
| 52 | 4165 32942 50 | Cylinderrör Ø63/73, kompl | Cylinder tube Ø63/73, cpl |
| 53 | 4165 86558 00 | Styrning, Ø63/32 | Guide, Ø63/32 |
| 54 | 4165 86550 00 | Låsringshalvor för cyl Ø63 | Locking halfs for cyl Ø63 |
| 55 | 4735 31 46 61 | Spårring AV 58 FZB | Retaining ring AV 58 FZB |
| 56 | 4165 34198 00 | Distansring | Spacer |
| 57 | 4165 34192 00 | Packningssats | Sealing kit |
| 58 | 4165 29036 00 | Dekal: Däcktryck 270kPa | Decal: Tyre pressure 270kPa |
| 59 | 4735 21 85 88 | Bricka Nord-Lock NLX 16 SP FZB | Washer Nord-Lock NLX 16 SP FZB |
| 60 | 4165 03607 05 | Mutter M6M 16-12 MW | Nut ISO 4032-16-12 MW |
| 61 | 4165 36610 00 | Rörklammer, Ø70 | Tube clamp, Ø70 |
| 62 | 4725 24 49 51 | Skruv M6S 8x 16- 8.8 FZB | Bolt ISO 4014 - M8 x 16-8.8 FZB |
| 63 | 4734 11 64 01 | Bricka BRB 8,4x16 FZB | Washer ISO 7089 - 8 |

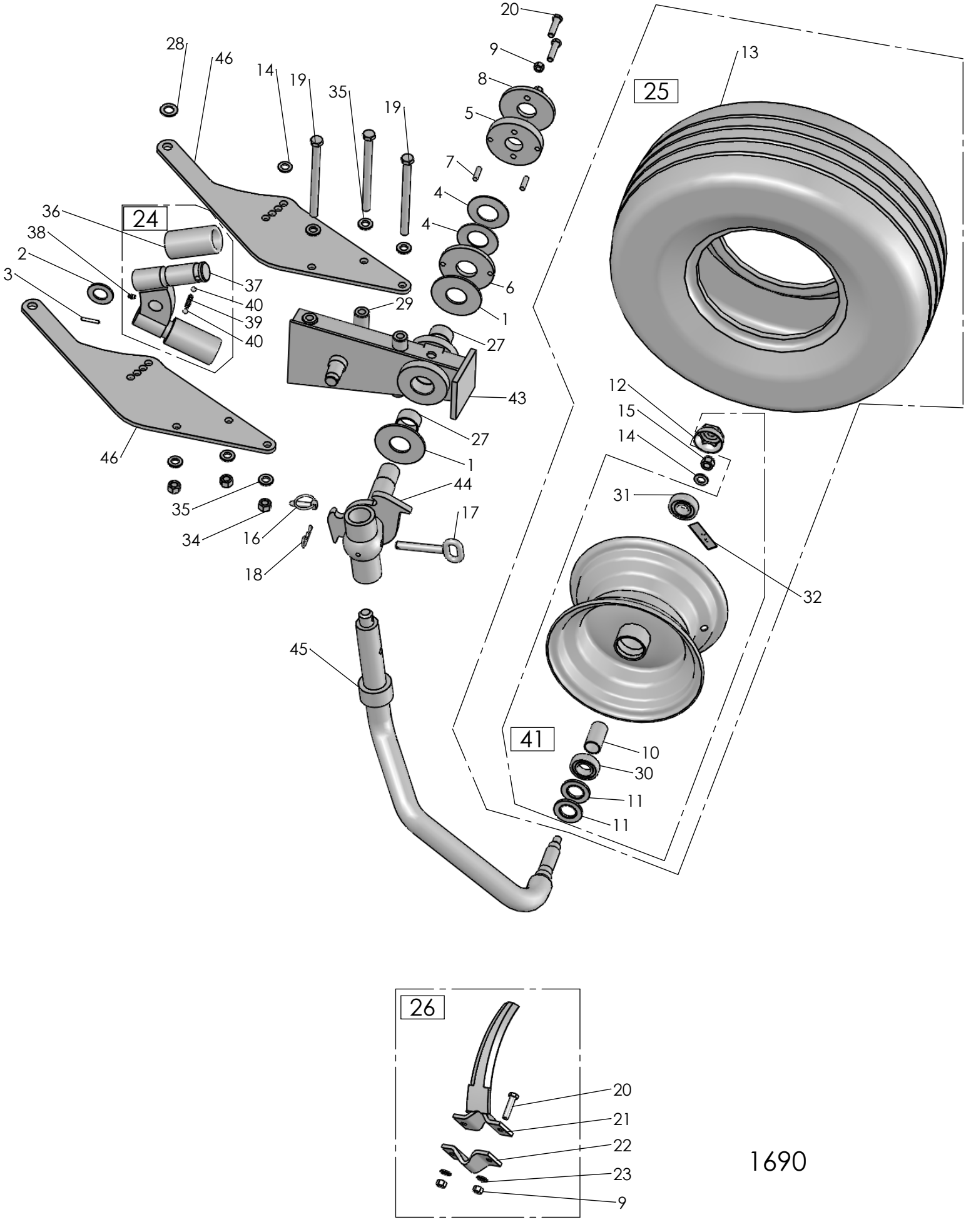


1690



2018-11-06

| Pos nr/ Ref No | Detalj nr/ Part No | Benämning | Description |
|---|---|---|---|
| **1690 Ö** | **96500-93** | **KOMBIHJUL** | **COMBI WHEEL** |
| 1 | 4165 96498 00 | Bromslager | Brake disc |
| 2 | 4734 12 04 01 | Bricka BRB 31x 56 FZB | Washer ISO 7089 - 30 |
| 3 | 4721 43 47 01 | Fjädrande rörpinne FRP 6x 40 FZB | Spring Pin ISO 8752 - 6 x 40 FZB |
| 4 | 4165 97275 00 | Tallriksfjäder, TF 90x46x2.5 | Spring disc, TF 90x46x2.5 |
| 5 | 4165 96499 00 | Ledaxellås för tallriksbricka | Lock ring |
| 6 | 4165 97273 00 | Tallrikshållare | Holder |
| 7 | 4165 97274 00 | Styrtapp | Pivot pin |
| 8 | 4165 96501 00 | Låsbricka | Lock washer |
| 9 | 4731 23 22 01 | Mutter M6M 12- 8 FZB | Nut ISO - 4032 - M12-8 FZB |
| 10 | 4165 93470 00 | Hylsa, Ø31/35x64,2 | Sleeve, Ø31/35x64,2 |
| 11 | 4165 93473 00 | Z-lamell Z007 | Z-lamell Z007 |
| 12 | 4165 93469 00 | Navkapsel Hadsten nr 928 | Hub cap Hadsten no 928 |
| 13 | 4165 97338 00 | Däck 10.0/80-12/10 | Tyre 10.0/80-12/10 |
| 14 | 4734 11 86 01 | Bricka BRB 17x30 FZB | Washer ISO 7089 - 16 |
| 15 | 4732 21 24 51 | Mutter M6M 16- 8 NF FZB | Nut ISO 7040-M16-8-NF FZB |
| 16 | 4165 85005 00 | Ringsprint, Ø11x34 | Linch pin, Ø11x34 |
| 17 | 4165 98319 00 | Säkringstapp, Ø16x105 | Pin, Ø16x105 |
| 18 | 4165 85763 00 | Hårnålssprint, Ø3,5 | Cotter pin, Ø3,5 |
| 19 | 4165 90856 00 | Skruv M16x215-12.9 MW | Bolt M16x215-12.9 MW |
| 20 | 4725 25 42 51 | Skruv M6S 12x 50- 8.8 FZB | Bolt ISO 4014 - M12 x 50-8.8 FZB |
| 21 | 4165 97435 40 | Skrapa | Scraper |
| 22 | 4165 94538 40 | Fästplåt | Bracket plate |
| 23 | 4734 11 78 01 | Bricka BRB 13x 24 FZB | Washer ISO 7089 - 12 FZB |
| 24 | 4165 94946 00 | Spärrkläpp | Catch cpl. |
| 25 | 4165 36247 51 | Hjul 10.0/80-12, kompl | Wheel 10.0/80-12, cpl |
| 26 | 4165 97437 00 | Skrapa, kompl | Scraper, cpl |
| 27 | 4165 27994 00 | Glidlager, Ø45/50x30 SBT | Slide bearing, Ø45/50x30 SBT |
| 28 | 4734 11 92 01 | Bricka BRB 21x 37 FZB | Washer ISO 7089-M20-200 HV |
| 29 | 4165 98372 40 | Hylsa, Ø16/32x168 | Sleeve, Ø16/32x168 |
| 30 | 4738 22 06 19 | Kullager 6206-2RS1 | Ballbearing 6206-2RS1 |
| 31 | 4738 23 05 34 | Kullager 6305-2RS1 | Ballbearing, 6305-2RS1 |
| 32 | 4165 99369 00 | Dekal: Däcktryck 300kPa | Decal: Tyre pressure 300kPa |
| 34 | 4165 03607 05 | Mutter M6M 16-12 MW | Nut ISO 4032-16-12 MW |
| 35 | 4735 21 85 88 | Bricka Nord-Lock NLX 16 SP FZB | Washer Nord-Lock NLX 16 SP FZB |
| 36 | 4165 94949 00 | Hylsa | Sleeve |
| 37 | 4165 94947 00 | Kläpp | Catch |
| 38 | 4738 88 20 03 | Smörjnippel, AM 8x1,25 FZB | Grease nipple, AM 8x1,25 FZB |
| 39 | 4165 83046 00 | Tryckfjäder | Push Spring |
| 40 | 4738 61 32 02 | Kula | Ball |
| 41 | 4165 97339 50 | Fälg med nav, 7.00x12 | Rim with hub, 7.00x12 |
| 42 | 4165 94540 90 | Fäste komplett | Bracket cmpl |
| 43 | 4165 98321 90 | Konsol för bultade sidor | Bracket |
| 44 | 4165 24068 90 | Axelinfästning | Axle mounting |
| 45 | 4165 24067 90 | Hjulaxel | Wheelaxle |
| 46 | 4165 97333 90 | Sida för bultning | Sideplate |

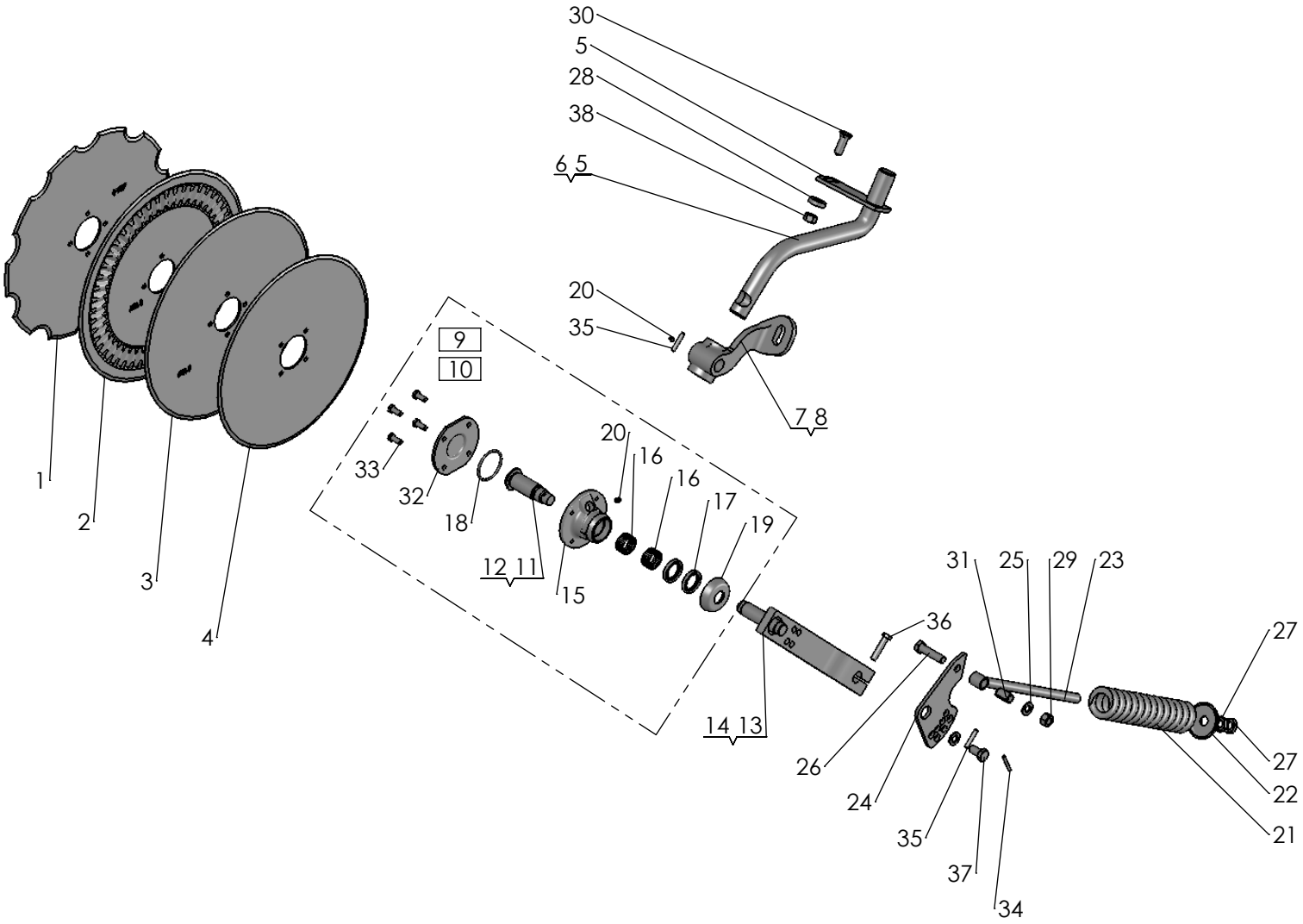


698



2018-10-23

| Pos nr/ Ref No | Detalj nr/ Part No | Benämning | Description |
|---|---|---|---|
| **698 Ö** | **25500** | **FJÄDRANDE SKIVRIST** | **SPRING-LOADED DISC COULTER** |
| 1 | 4165 80664 40 | Skivristklinga Ø500 (20"), tandad | Coulter disc Ø500 (20"), notched |
| 2 | 4165 80663 40 | Skivristklinga Ø500, ripplad | Disk coulter Ø500, rippled |
| 3 | 4165 80662 40 | Skivristklinga Ø500, slät | Disc coulter Ø500, plain |
| 4 | 4165 72547 40 | Skivristklinga Ø457 (18"), slät | Disc coulter Ø457 (18"), plain |
| 5 | 4165 27751 90 | Skivristskaft 296x266, höger | Disc coulter shank 296x266, RH |
| 6 | 4165 27752 90 | Skivristskaft 296x266, vänster | Disc coulter shank 296x266, LH |
| 7 | 4165 35304 90 | Skivristfäste höger gjuten | Disc bracket right casting |
| 8 | 4165 35412 90 | Skivristfäste vänster gjuten | Disc bracket left casting |
| 9 | 4165 75975 00 | Skivristnav utan klinga, höger | Disc coulter hub without disc, RH |
| 10 | 4165 92237 00 | Skivristnav utan klinga, vänster | Disc coulter hub without disc, LH |
| 11 | 4165 81076 00 | Tapp, skivrist höger | Pin, disc coulter RH |
| 12 | 4165 85671 00 | Tapp, skivrist vänster | Pin, disc coulter LH |
| 13 | 4165 86639 90 | Skivristarm, höger | Disc coulter arm, RH |
| 14 | 4165 86642 90 | Skivristarm, vänster | Disc coulter arm, LH |
| 15 | 4165 80967 40 | Nav, skivrist | Hub, disc coulter |
| 16 | 4165 75545 00 | Nållager, 35/42x20 | Needle bearing, 35/42x20 |
| 17 | 4740 51 77 00 | Radialtätning, A35x52x7 | Sealing ring, A35x52x7 |
| 18 | 4740 48 48 04 | O-ring, OR 65,09x3,53 | O-ring, OR 65,09x3,53 |
| 19 | 4165 80959 00 | Tätningsbricka | Sealing washer |
| 20 | 4738 88 20 03 | Smörjnippel, AM 8x1,25 FZB | Grease nipple, AM 8x1,25 FZB |
| 21 | 4165 81529 00 | Tryckfjäder | Spring |
| 22 | 4165 80961 00 | Bricka (fjäderstyrning) | Washer (spring guide) |
| 23 | 4165 85438 00 | Dragstång för skivrist | Shank |
| 24 | 4165 25249 90 | Hävarm | Lever |
| 25 | 4734 11 86 01 | Bricka BRB 17x30 FZB | Washer ISO 7089 - 16 |
| 26 | 4725 26 33 51 | Skruv M6S 16x 65- 8.8 FZB | Bolt ISO 4014 - M16 x 65-8.8 FZB |
| 27 | 4731 43 26 01 | Mutter ML6M 20- 5 FZB | Hexagon Thin Nut ISO - 4035 - M20 |
| 28 | 4165 85884 00 | Bricka, Ø17/38x10 | Washer, Ø17/38x10 |
| 29 | 4731 23 24 01 | Mutter M6M 16- 8 FZB | Nut ISO - 4032 - M16-8 FZB |
| 30 | 4165 03602 35 | Skruv MFBK 16x 50-10.9 MW | Nib bolt MFBK 16x 50-10.9 MW |
| 31 | 4165 86240 09 | Fjädrande rörpinne FRP 20x 36 | Spring pin DIN 7346 S Ø20x36 |
| 32 | 4165 80966 40 | Lock för plan klinga | Cover for disc |
| 33 | 4725 24 93 51 | Skruv M6S 10x 25- 8.8 FZB | Bolt ISO 4014 - M10 x 25-8.8 FZB |
| 34 | 4721 43 49 01 | Fjädrande rörpinne FRP 6x 50 FZB | Spring Pin ISO 8752 - 6 x 50 FZB |
| 35 | 4721 43 84 01 | Fjädrande rörpinne FRP 8x 45 FZB | Spring Pin ISO 8752 - 8 x 45 FZB |
| 36 | 4725 25 43 51 | Skruv M6S 12x 55- 8.8 FZB | Bolt ISO 4014 - M12 x 55-8.8 FZB |
| 37 | 4725 26 24 51 | Skruv M6S 16x 30- 8.8 FZB | Bolt ISO 4014- M16x 30-8.8 FZB |
| 38 | 4731 23 24 51 | Mutter M6M 16-10 MW | Nut ISO-4032 M16-10 MW |

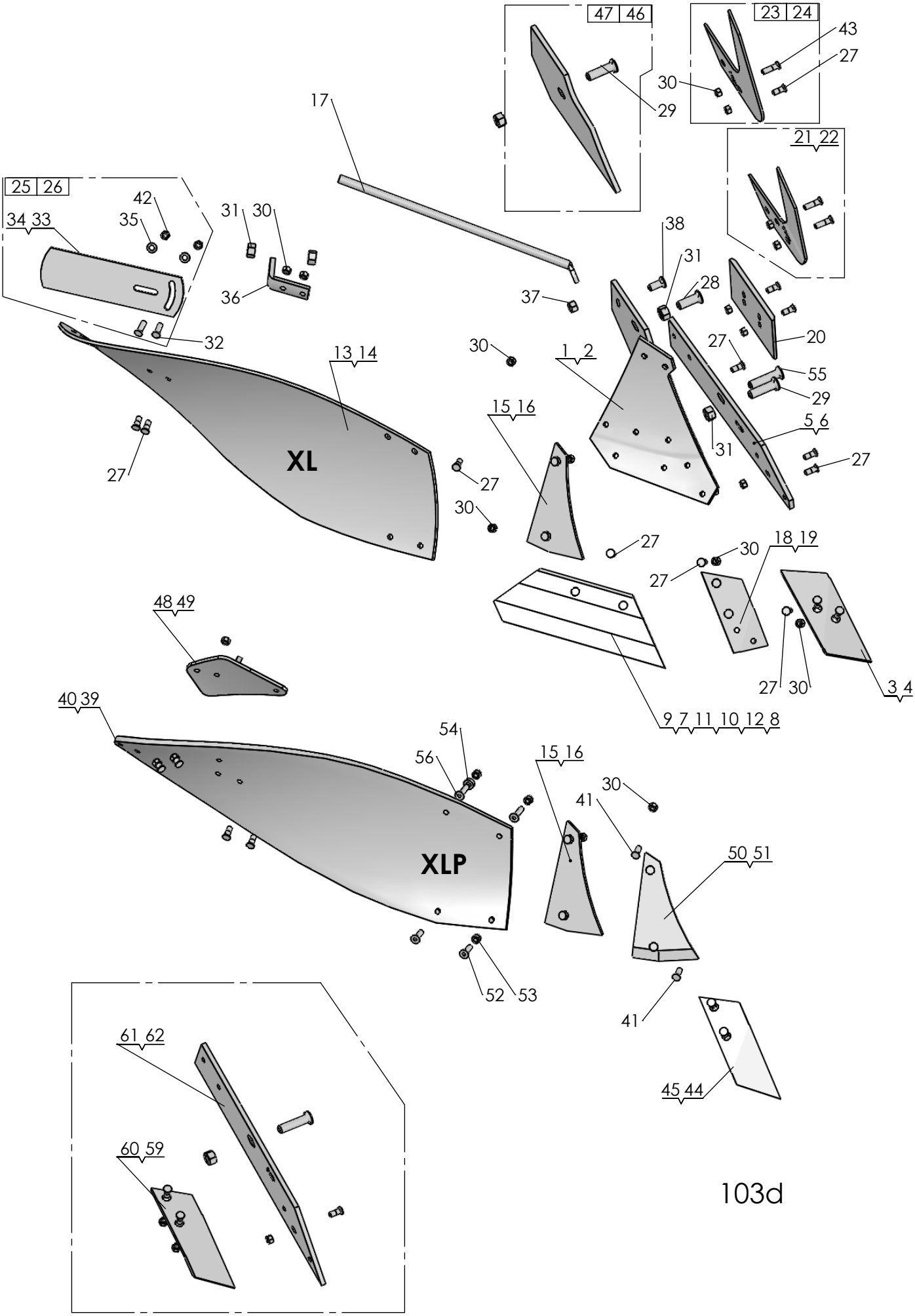


103d

2018-08-28

| Pos nr/ Ref No | Detalj nr/ Part No | Benämning | Description |
|---|---|---|---|
| **103D** | | **PLOGKROPP XL, XLP** | **PLOUGH BODY XL, XLP** |
| 1 | 4165 94616 90 | Ställ XL, Höger | Frog XL, Right |
| 2 | 4165 94617 90 | Ställ XL, vänster | Frog XL, left |
| 3 | 4165 94608 09 | Spets höger XL, XU, kompl | Point right XL, XU, cpl |
| 4 | 4165 94609 09 | Spets vänster XL, XU, kompl | Point left XL, XU, cpl |
| 5 | 4165 94604 09 | Landsida XL höger, kompl | Landside XL RH, cpl |
| 6 | 4165 94605 09 | Landsida XL vänster, kompl | Landside XL LH, cpl |
| 7 | 4165 94598 09 | Skär höger 350 (14") XL, kompl | Share RH 350 (14") XL, cpl |
| 8 | 4165 94599 09 | Skär vänster 350 (14") XL, kompl | Share LH 350 (14") XL, cpl |
| 9 | 4165 94600 09 | Skär höger 400 (16") XL, kompl | Share RH 400 (16") XL, cpl |
| 10 | 4165 94601 09 | Skär vänster 400 (16") XL, kompl | Share LH 400 (16") XL, cpl |
| 11 | 4165 94602 09 | Skär höger 450 (18") XL, kompl | Share RH 450 (18") XL, cpl |
| 12 | 4165 94603 09 | Skär väster 450 (18") XL, kompl | Share LH 450 (18") XL, cpl |
| 13 | 4165 94594 09 | Vändskiva XL/AX kompl, höger | Mouldboard XL/AX cpl, RH |
| 14 | 4165 94595 09 | Vändskiva XL/AX kompl, vänster | Mouldboard XL/AX cpl, LH |
| 15 | 4165 94596 09 | Vändskivebröst XL höger, kompl | Mouldboard shin XL right, cpl |
| 16 | 4165 94597 09 | Vändskivebröst XL vänster, kompl | Mouldboard shin XL left, kompl |
| 17 | 4165 94614 00 | Vändskivestötta XL, AX | Support Stay XL, AX |
| 18 | 4165 94612 09 | Spetsplatta XL höger, kompl | Point plate XL RH, cpl |
| 19 | 4165 94613 09 | Spetsplatta XL vänster, kompl | Point plate LH, cpl |
| 20 | 4165 94289 09 | Slitplatta låg, kompl | Wearing plate low, cpl |
| 21 | 4165 94622 09 | Knivrist kompl, höger | Knife coulter cpl, RH |
| 22 | 4165 94623 09 | Knivrist kompl, vänster | Knife coulter cpl, LH |
| 23 | 4165 29438 49 | Knivrist QR höger, kompl | Knife coulter QR RH, cpl |
| 24 | 4165 29439 49 | Knivrist QR vänster, kompl | Knife coulter QR LH, cpl |
| 25 | 4165 85461 49 | Tiltvinge höger, kompl | Mouldboard extension RH, cpl |
| 26 | 4165 85462 49 | Tiltvinge vänster, kompl | Mouldboard extension LH, cpl |
| 27 | 4165 03612 21 | Skruv MFBKF 12x32-12.9 MW | Nib bolt MFBKF 12x32-12.9 MW |
| 28 | 4165 03602 57 | Skruv MFBK 20x 60-10.9 MW | Nib bolt MFBK 20x 60-10.9 MW |
| 29 | 4165 03602 58 | Skruv MFBK 20x 75-10.9 MW | Nib bolt MFBK 20x 75-10.9 MW |
| 30 | 4165 03613 03 | Mutter M6M 12x1,25-12 MW | Nut ISO - 8673 - M12 x 1,25-12 MW |
| 31 | 4731 23 26 51 | Mutter M6M 20-10 MW | Nut ISO - 4032 - M20-10 MW |
| 32 | 4165 03602 23 | Skruv MFBK 12x 40-10.9 MW | Nib bolt MFBK 12x 40-10.9 MW |
| 33 | 4165 74922 40 | Tiltvinge, höger | Mouldboard extension, RH |
| 34 | 4165 80559 40 | Tiltvinge, vänster | Mouldboard extension, LH |
| 35 | 4734 11 78 01 | Bricka BRB 13x 24 FZB | Washer ISO 7089 - 12 FZB |
| 36 | 4165 94615 40 | Stagvinkel | Bracket |
| 37 | 4731 23 24 01 | Mutter M6M 16- 8 FZB | Nut ISO - 4032 - M16-8 FZB |
| 38 | 4165 03602 33 | Skruv MFBK 16x 40-10.9 MW | Nib bolt MFBK 16x 40-10.9 MW |
| 39 | 4165 24803 09 | Vändskiva XLP, Höger | Mouldboard XLP, Right |
| 40 | 4165 24804 09 | Vändskiva XLP vänster, kompl | Mouldboard XLP LH, cpl |
| 41 | 4165 03602 22 | Skruv MFBK 12x 35-10.9 MW | Nib bolt MFBK 12x 35-10.9 MW |
| 42 | 4731 23 22 51 | Mutter M6M 12-10 MW | Nut ISO 4032-M12-10 MW |
| 43 | 4165 03612 24 | Skruv MFBKF 12x45-12.9 MW | Bolt MFBKF 12x45-12.9 MW |
| 44 | 4165 96272 09 | Spets nedsänkt XL, XS höger, kompl | Point short XL, ,XS RH, cpl |
| 45 | 4165 96273 09 | Spets nedsänkt XL, XS vänster, kompl | Point short XL, XS LH, cpl |
| 46 | 4165 23924 49 | Täckplåt XL/AX kompl, höger | Covering plate XL/AX cpl, RH |
| 47 | 4165 23925 49 | Täckplåt XL/AX kompl , vänster | Covering plate XL/AX cpl, LH |
| 48 | 4165 24367 40 | Vinkelstötta, höger | Angle support, RH |
| 49 | 4165 24797 40 | Vinkelstötta, vänster | Angle support, LH |
| 50 | 4165 24801 09 | Vändskivebröst med fas höger, kompl | Mouldboard shin with chamfer RH, cpl |
| 51 | 4165 24802 09 | Vändskivebröst med fas vänster, kompl | Mouldboard shin with chamfer LH, cpl |
| 52 | 4725 65 40 01 | Skruv MF6S 12x 40- 8.8 FZB | Bolt ISO 10642 - M12 x 40-8.8 FZB |
| 53 | 4732 21 22 51 | Mutter M6M 12- 8 NF FZB | Nut ISO 7040-M12-8-NF FZB |
| 54 | 4165 89489 00 | Bricka, Ø13/25x10 | Washer, Ø13/25x10 |
| 55 | 4165 03602 60 | Skruv MFBK 20x 85-10.9 MW | Nib bolt MFBK 20x 85-10.9 MW |
| 56 | 4725 65 42 01 | Skruv MF6S 12x 50- 8.8 FZB | Bolt ISO 10642 - M12 x 50-8.8 FZB |
| 59 | 4165 94611 09 | Billspets AX, AH vänster, kompl | Point AX, AH left, cpl |
| 60 | 4165 94610 09 | Billspets AX, AH höger, kompl | Point AX, AH right, cpl |
| 61 | 4165 94606 09 | Landsida AX, AXP höger, kompl | Landside AX, AXP RH, cpl |
| 62 | 4165 94607 09 | Landsida AX, AXP, vänster, komp | Landside AX, AXP, LH, cpl |

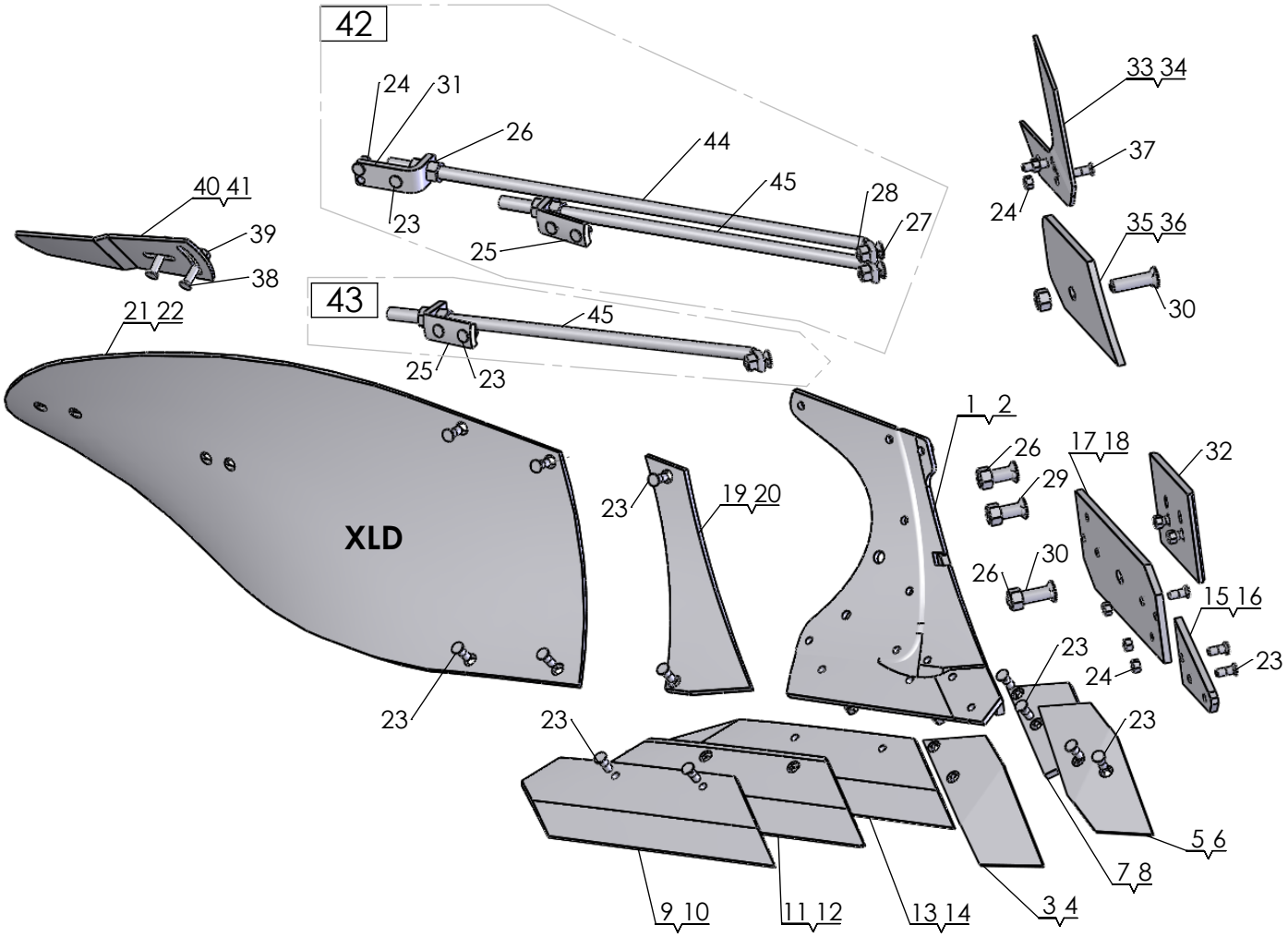


1322



12-10-2017

| Pos nr/ Ref No | Detalj nr/ Part No | Benämning | Description |
|---|---|---|---|
| **1322 Ö** | | **PLOGKROPP XLD** | **PLOUGH BODY XLD** |
| 1 | 4165 35010 90 | XLD Ställ, Höger | XLD Frog, Right |
| 2 | 4165 35011 90 | XLD Ställ, Vänster | XLD Frog, Left |
| 3 | 4165 35070 09 | XLD Spets, Höger, kompl. | XLD Point, Right, Compl. |
| 4 | 4165 35071 09 | XLD Spets, Vänster, Kompl. | XLD Point, Left, Compl. |
| 5 | 4165 35074 09 | XLD Vändbar Spets, Höger, Kompl. | XLD Reversible Point, Right, Compl. |
| 6 | 4165 35075 09 | XLD Vändbar Spets, Vänster, Kompl. | XLD Reverisble Point, Left, Compl. |
| 7 | 4165 35076 09 | XLD Spetsplatta, Höger, Kompl. | XLD Point Bracket, Right, Compl. |
| 8 | 4165 35077 09 | XLD Spetsplatta, Vänster, Kompl. | XLD Point bracket, Left, Compl. |
| 9 | 4165 35040 09 | XLD Skär 16", Höger, Kompl. | XLD Share 16", Right, Compl. |
| 10 | 4165 35041 09 | XLD Skär 16", Vänster, Kompl. | XLD Share 16", Left, Compl. |
| 11 | 4165 35042 09 | XLD Skär 18", Höger, Kompl. | XLD Share 18", Right, Compl. |
| 12 | 4165 35043 09 | XLD Skär 18", Vänster, Kompl. | XLD Share 18", Left, Compl. |
| 13 | 4165 35044 09 | XLD Skär 20", Höger, Kompl. | XLD Share 20", Right, Compl. |
| 14 | 4165 35045 09 | XLD Skär 20", Vänster, Kompl. | XLD Share 20", Left, Compl. |
| 15 | 4165 35060 09 | XLD Landsida främre, Höger, Kompl. | XLD Landside Forward, Right, Compl. |
| 16 | 4165 35061 09 | XLD Landsida Främre, Vänster, Kompl. | XLD Landside Forward, Left, Compl. |
| 17 | 4165 35062 09 | XLD Landsida Bakre, Höger, Kompl. | XLD Landside Rear, Right, Compl. |
| 18 | 4165 35063 09 | XLD Landsida Bakre, Vänster, Kompl. | XLD Landside Rear, Left, Compl. |
| 19 | 4165 35080 09 | XLD Bröst, Höger, Kompl. | XLD Chest, Right, Compl. |
| 20 | 4165 35081 09 | XLD Bröst, Vänster, Kompl. | XLD Chest, Left, Compl. |
| 21 | 4165 35020 09 | XLD Vändskiva, Höger, Kompl. | XLD Mouldboard, Right, Compl. |
| 22 | 4165 35021 09 | XLD Vändskiva, Vänster, Kompl. | XLD Mouldboard, Left, Compl. |
| 23 | 4165 03612 21 | Skruv MFBKF 12x32-12.9 MW | Nib bolt MFBKF 12x32-12.9 MW |
| 24 | 4165 03613 03 | Mutter M6M 12x1,25-12 MW | Nut ISO - 8673 - M12 x 1,25-12 MW |
| 25 | 4165 94615 40 | Stagvinkel | Bracket |
| 26 | 4731 23 26 51 | Mutter M6M 20-10 MW | Nut ISO - 4032 - M20-10 MW |
| 27 | 4165 03602 33 | Skruv MFBK 16x 40-10.9 MW | Nib bolt MFBK 16x 40-10.9 MW |
| 28 | 4731 23 24 01 | Mutter M6M 16- 8 FZB | Nut ISO - 4032 - M16-8 FZB |
| 29 | 4165 03602 57 | Skruv MFBK 20x 60-10.9 MW | Nib bolt MFBK 20x 60-10.9 MW |
| 30 | 4165 03602 58 | Skruv MFBK 20x 75-10.9 MW | Nib bolt MFBK 20x 75-10.9 MW |
| 31 | 4165 35096 40 | Stagfäste | Stay Bracket |
| 32 | 4165 94289 09 | Slitplatta låg, kompl | Wearing plate low, cpl |
| 33 | 4165 94622 09 | Knivrist kompl, höger | Knife coulter cpl, RH |
| 34 | 4165 94623 09 | Knivrist kompl, vänster | Knife coulter cpl, LH |
| 35 | 4165 35112 09 | XLD Täckplåt ställ Kompl., Höger | XLD Cover plate Frog Compl., Right |
| 36 | 4165 35113 09 | XLD Täckplåt ställ Kompl. Vänster | XLD Frog protection plate Compl, Left |
| 37 | 4165 03612 24 | Skruv MFBKF 12x45-12.9 MW | Bolt MFBKF 12x45-12.9 MW |
| 38 | 4165 03602 23 | Skruv MFBK 12x 40-10.9 MW | Nib bolt MFBK 12x 40-10.9 MW |
| 39 | 4165 03615 05 | Mutter M6MF 12- 8 FZB | Nut ISO - 4161 - M12 FZB |
| 40 | 4165 85461 09 | Tiltvinge höger, kompl | Mouldboard extension RH, cpl |
| 41 | 4165 85462 09 | Tiltvinge vänster, kompl | Mouldboard extension LH, cpl |
| 42 | 4165 36339 01 | XLD dubbel stötta, kompl | XLD double stay, cpl |
| 43 | 4165 36337 01 | XLD stötta, kompl | XLD stay, cpl |
| 44 | 4165 35095 00 | Vändskivestötta XLD | Mouldboard stay XLD |
| 45 | 4165 35094 00 | Vändskivestötta XLD | Mouldboard stay XLD |

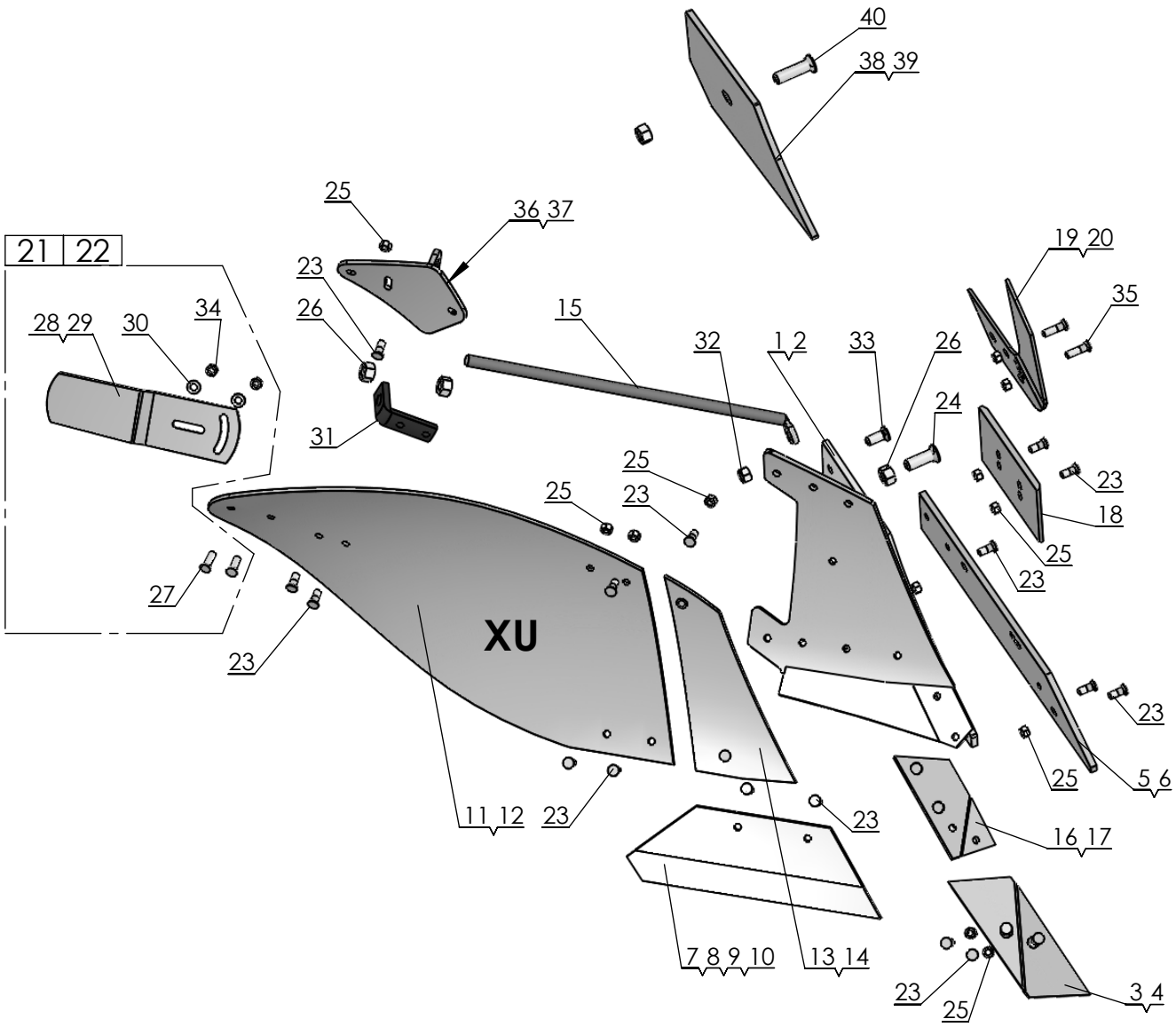


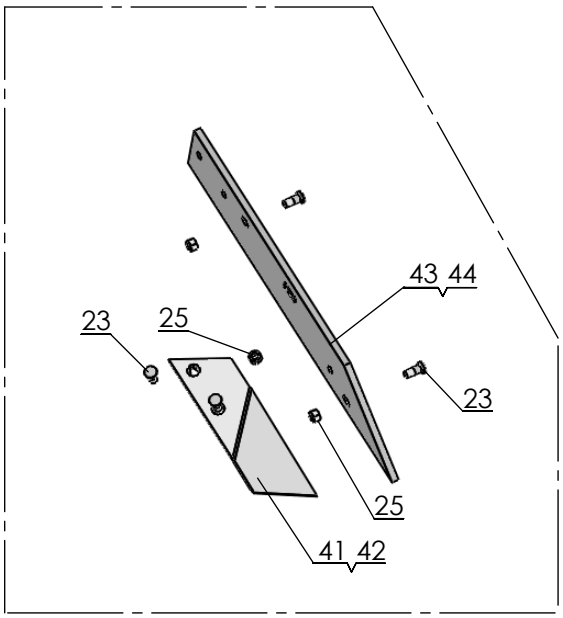


660



2018-08-28

| Pos nr/ Ref No | Detalj nr/ Part No | Benämning | Description |
|---|---|---|---|
| **660** | | **PLOGKROPP XU** | **PLOUGH BODY** |
| 1 | 4165 20539 90 | Ställ XU Höger | Frog XU Right |
| 2 | 4165 20540 90 | Ställ XU Vänster | Frog XU Left |
| 3 | 4165 94608 09 | Spets höger XL, XU, kompl | Point right XL, XU, cpl |
| 4 | 4165 94609 09 | Spets vänster XL, XU, kompl | Point left XL, XU, cpl |
| 5 | 4165 96094 09 | Landsida XU höger, kompl | Landside XU RH, cpl |
| 6 | 4165 96095 09 | Landsida XU vänster, kompl | Landside XU LH, cpl |
| 7 | 4165 96090 09 | Skär XU 400 (16") höger, kompl | Share XU 400 (16") RH, cpl |
| 8 | 4165 96091 09 | Skär XU 400 (16") vänster, kompl | Share XU 400 (16") LH, cpl |
| 9 | 4165 96092 09 | Skär XU 450 (18") höger, kompl | Share XU 450 (18") RH, cpl |
| 10 | 4165 96093 09 | Skär XU 450 (18") vänster, kompl | Share XU 450 (18") LH, cpl |
| 11 | 4165 96084 09 | Vändskiva XU höger, kompl | Mouldboard XU RH, cpl |
| 12 | 4165 96085 09 | Vändskiva XU vänster, kompl | Mouldboard XU LH, cpl |
| 13 | 4165 96086 09 | Vändskivebröst XU/AH höger, kompl | Mouldboard shin XU/AH RH, cpl |
| 14 | 4165 96087 09 | Vändskivebröst XU/AH vänster, kompl | Mouldboard shin XU/AH LH, cpl |
| 15 | 4165 96104 00 | Vändskivestötta XU, AH, XS, AS | Mouldboard stay XU, AH, XS, AS |
| 16 | 4165 94612 09 | Spetsplatta XL höger, kompl | Point plate XL RH, cpl |
| 17 | 4165 94613 09 | Spetsplatta XL vänster, kompl | Point plate LH, cpl |
| 18 | 4165 94289 09 | Slitplatta låg, kompl | Wearing plate low, cpl |
| 19 | 4165 94622 09 | Knivrist kompl, höger | Knife coulter cpl, RH |
| 20 | 4165 94623 09 | Knivrist kompl, vänster | Knife coulter cpl, LH |
| 21 | 4165 85461 49 | Tiltvinge höger, kompl | Mouldboard extension RH, cpl |
| 22 | 4165 85462 49 | Tiltvinge vänster, kompl | Mouldboard extension LH, cpl |
| 23 | 4165 03612 21 | Skruv MFBKF 12x32-12.9 MW | Nib bolt MFBKF 12x32-12.9 MW |
| 24 | 4165 03602 57 | Skruv MFBK 20x 60-10.9 MW | Nib bolt MFBK 20x 60-10.9 MW |
| 25 | 4165 03613 03 | Mutter M6M 12x1,25-12 MW | Nut ISO - 8673 - M12 x 1,25-12 MW |
| 26 | 4731 23 26 51 | Mutter M6M 20-10 MW | Nut ISO - 4032 - M20-10 MW |
| 27 | 4165 03602 23 | Skruv MFBK 12x 40-10.9 MW | Nib bolt MFBK 12x 40-10.9 MW |
| 28 | 4165 74922 40 | Tiltvinge, höger | Mouldboard extension, RH |
| 29 | 4165 80559 40 | Tiltvinge, vänster | Mouldboard extension, LH |
| 30 | 4734 11 78 01 | Bricka BRB 13x 24 FZB | Washer ISO 7089 - 12 FZB |
| 31 | 4165 94615 40 | Stagvinkel | Bracket |
| 32 | 4731 23 24 01 | Mutter M6M 16- 8 FZB | Nut ISO - 4032 - M16-8 FZB |
| 33 | 4165 03602 33 | Skruv MFBK 16x 40-10.9 MW | Nib bolt MFBK 16x 40-10.9 MW |
| 34 | 4731 23 22 51 | Mutter M6M 12-10 MW | Nut ISO 4032-M12-10 MW |
| 35 | 4165 03612 24 | Skruv MFBKF 12x45-12.9 MW | Bolt MFBKF 12x45-12.9 MW |
| 36 | 4165 24260 40 | Vinkelstötta, höger | Angle bracket, RH |
| 37 | 4165 24262 40 | Vinkelstötta, vänster | Angle bracket, LH |
| 38 | 4165 29282 49 | Täckplåt XU/AH kompl, höger | Covering plate XU/AH cpl, RH |
| 39 | 4165 29283 49 | Täckplåt XU/AH kompl, vänster | Covering plate XU/AX cpl, LH |
| 40 | 4165 03602 58 | Skruv MFBK 20x 75-10.9 MW | Nib bolt MFBK 20x 75-10.9 MW |
| 41 | 4165 94610 09 | Billspets AX, AH höger, kompl | Point AX, AH right, cpl |
| 42 | 4165 94611 09 | Billspets AX, AH vänster, kompl | Point AX, AH left, cpl |
| 43 | 4165 96096 09 | Landsida AH, AS, höger, kompl | Landside AH, AS, right, cpl |
| 44 | 4165 96097 09 | Landsida AH, AS, vänster, kompl | Landside AH, AS, left, cpl |

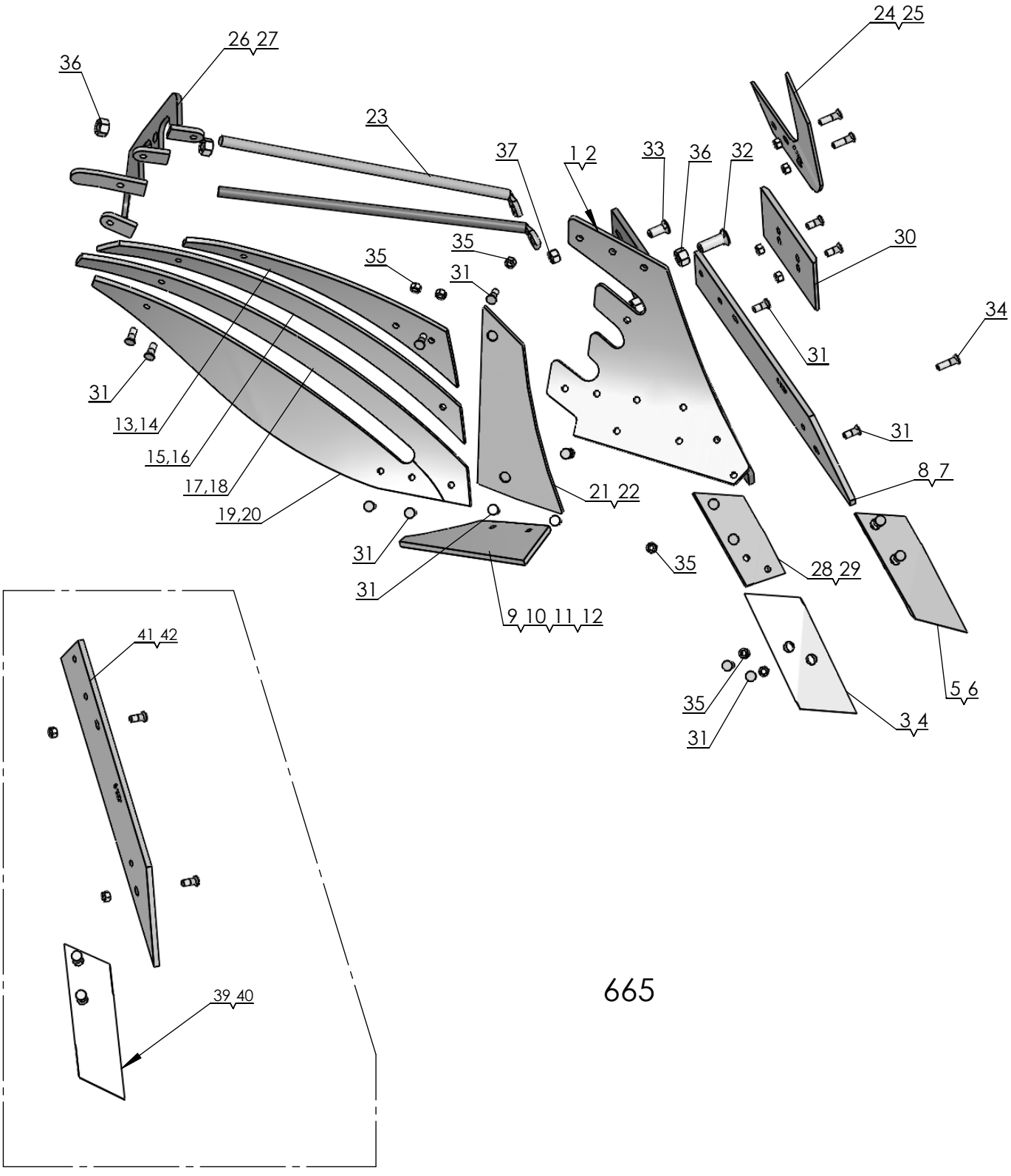
24 25
26 27
36
23
37
1 2
33
36
32
30
35
35
31
34
31
13,14
31
15,16
8 7
17,18
21 22
19,20
31
35
28 29
31
9 10 11 12
5 6
35
3 4
31
41 42
39 40
665



2018-08-28

| Pos nr/ Ref No | Detalj nr/ Part No | Benämning | Description |
|---|---|---|---|
| **665** | | **PLOGKROPP XS** | **PLOUGH BODY XS** |
| 1 | 4165 21619 90 | Plogställ XS, höger | Frog XS, RH |
| 2 | 4165 21620 90 | Plogställ XS, vänster | Frog XS, Left |
| 3 | 4165 94608 09 | Spets höger XL, XU, kompl | Point right XL, XU, cpl |
| 4 | 4165 94609 09 | Spets vänster XL, XU, kompl | Point left XL, XU, cpl |
| 5 | 4165 96272 09 | Spets nedsänkt XL, XS höger, kompl | Point short XL, ,XS RH, cpl |
| 6 | 4165 96273 09 | Spets nedsänkt XL, XS vänster, kompl | Point short XL, XS LH, cpl |
| 7 | 4165 96095 09 | Landsida XU vänster, kompl | Landside XU LH, cpl |
| 8 | 4165 96094 09 | Landsida XU höger, kompl | Landside XU RH, cpl |
| 9 | 4165 96090 09 | Skär XU 400 (16") höger, kompl | Share XU 400 (16") RH, cpl |
| 10 | 4165 96091 09 | Skär XU 400 (16") vänster, kompl | Share XU 400 (16") LH, cpl |
| 11 | 4165 96092 09 | Skär XU 450 (18") höger, kompl | Share XU 450 (18") RH, cpl |
| 12 | 4165 96093 09 | Skär XU 450 (18") vänster, kompl | Share XU 450 (18") LH, cpl |
| 13 | 4165 20249 09 | Strimla nr 1 höger, kompl | Stripe no 1 right, cpl |
| 14 | 4165 20894 09 | Strimla nr 1 övre vänster, kompl | Stripe no 1 upper left, cpl |
| 15 | 4165 20250 09 | Strimla nr 2 höger, kompl | Stripe no 2 right, cpl |
| 16 | 4165 20895 09 | Strimla nr 2 vänster, kompl | Stripe no 2 left, cpl |
| 17 | 4165 20251 09 | Strimla nr 3 höger, kompl | Stripe no 3 right, cpl |
| 18 | 4165 20896 09 | Strimla nr 3 vänster, kompl | Stripe no 3 left, cpl |
| 19 | 4165 20252 09 | Strimla nr 4 höger, kompl | Stripe no 4 right, cpl |
| 20 | 4165 20897 09 | Strimla nr 4 vänster, kompl | Stripe no 4 left, cpl |
| 21 | 4165 21470 09 | Vändskivebröst XS/AS höger, kompl | Mouldboard shin XS/AS right, cpl |
| 22 | 4165 21599 09 | Vändskivebröst XS/AS vänster, kompl | Mouldboard shin XS/AS left, cpl |
| 23 | 4165 96104 00 | Vändskivestötta XU, AH, XS, AS | Mouldboard stay XU, AH, XS, AS |
| 24 | 4165 94622 09 | Knivrist kompl, höger | Knife coulter cpl, RH |
| 25 | 4165 94623 09 | Knivrist kompl, vänster | Knife coulter cpl, LH |
| 26 | 4165 20268 40 | Brygga, höger | Bridge, right |
| 27 | 4165 20278 40 | Brygga, vänster | Bridge, left |
| 28 | 4165 94612 09 | Spetsplatta XL höger, kompl | Point plate XL RH, cpl |
| 29 | 4165 94613 09 | Spetsplatta XL vänster, kompl | Point plate LH, cpl |
| 30 | 4165 94289 09 | Slitplatta låg, kompl | Wearing plate low, cpl |
| 31 | 4165 03612 21 | Skruv MFBKF 12x32-12.9 MW | Nib bolt MFBKF 12x32-12.9 MW |
| 32 | 4165 03602 57 | Skruv MFBK 20x 60-10.9 MW | Nib bolt MFBK 20x 60-10.9 MW |
| 33 | 4165 03602 33 | Skruv MFBK 16x 40-10.9 MW | Nib bolt MFBK 16x 40-10.9 MW |
| 34 | 4165 03612 24 | Skruv MFBKF 12x45-12.9 MW | Bolt MFBKF 12x45-12.9 MW |
| 35 | 4165 03613 03 | Mutter M6M 12x1,25-12 MW | Nut ISO - 8673 - M12 x 1,25-12 MW |
| 36 | 4731 23 26 51 | Mutter M6M 20-10 MW | Nut ISO - 4032 - M20-10 MW |
| 37 | 4731 23 24 01 | Mutter M6M 16- 8 FZB | Nut ISO - 4032 - M16-8 FZB |
| 39 | 4165 94610 09 | Billspets AX, AH höger, kompl | Point AX, AH right, cpl |
| 40 | 4165 94611 09 | Billspets AX, AH vänster, kompl | Point AX, AH left, cpl |
| 41 | 4165 96096 09 | Landsida AH, AS, höger, kompl | Landside AH, AS, right, cpl |
| 42 | 4165 96097 09 | Landsida AH, AS, vänster, kompl | Landside AH, AS, left, cpl |

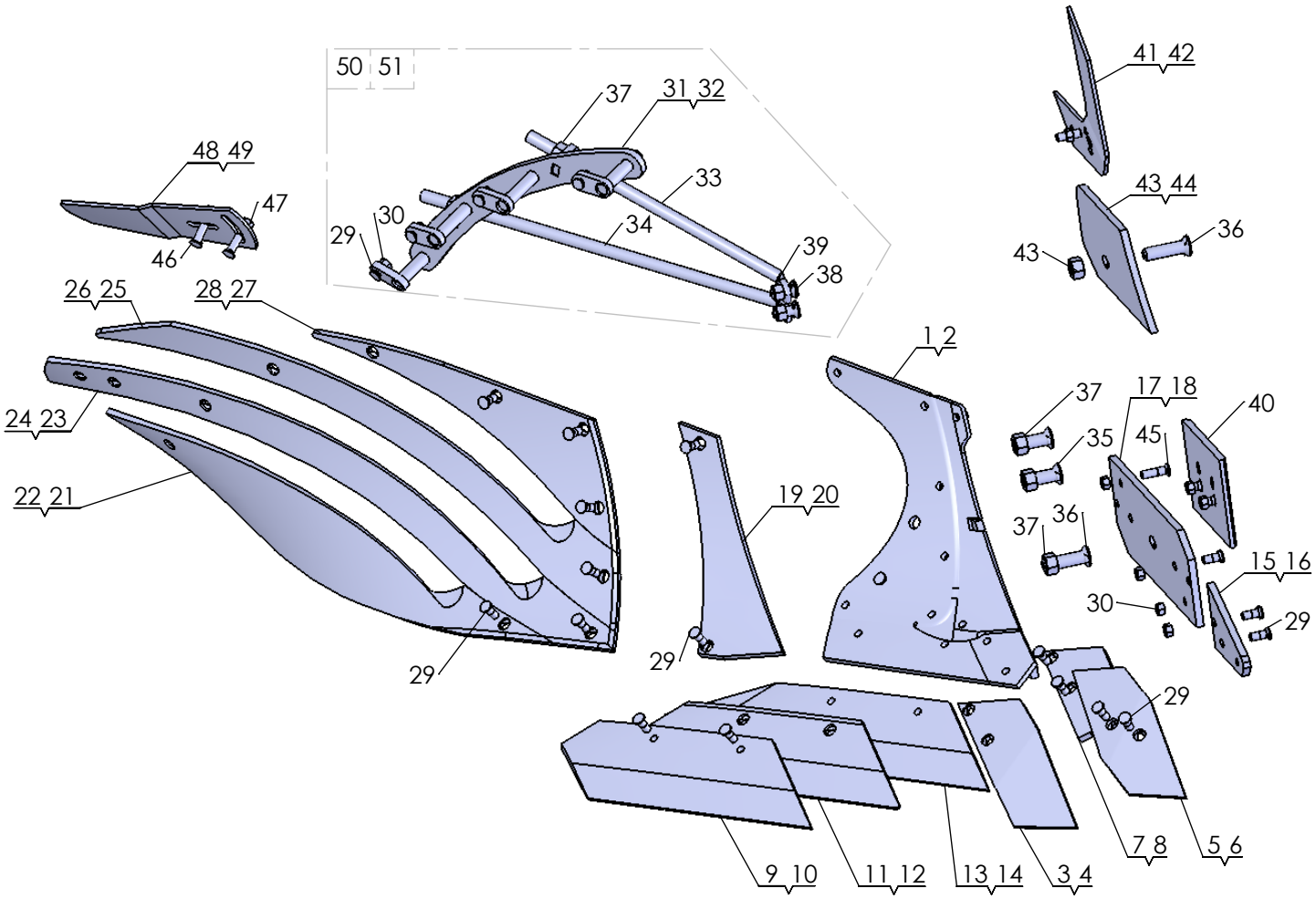


1520



29-11-2017

| Pos nr/ Ref No | Detalj nr/ Part No | Benämning | Description |
|---|---|---|---|
| **1520 Ö** | | **PLOGKROPP XSD** | **PLOUGH BODY XSD** |
| 1 | 4165 35010 90 | XLD Ställ, Höger | XLD Frog, Right |
| 2 | 4165 35011 90 | XLD Ställ, Vänster | XLD Frog, Left |
| 3 | 4165 35070 09 | XLD Spets, Höger, kompl. | XLD Point, Right, Compl. |
| 4 | 4165 35071 09 | XLD Spets, Vänster, Kompl. | XLD Point, Left, Compl. |
| 5 | 4165 35074 09 | XLD Vändbar Spets, Höger, Kompl. | XLD Reversible Point, Right, Compl. |
| 6 | 4165 35075 09 | XLD Vändbar Spets, Vänster, Kompl. | XLD Reverisble Point, Left, Compl. |
| 7 | 4165 35076 09 | XLD Spetsplatta, Höger, Kompl. | XLD Point Bracket, Right, Compl. |
| 8 | 4165 35077 09 | XLD Spetsplatta, Vänster, Kompl. | XLD Point bracket, Left, Compl. |
| 9 | 4165 35040 09 | XLD Skär 16", Höger, Kompl. | XLD Share 16", Right, Compl. |
| 10 | 4165 35041 09 | XLD Skär 16", Vänster, Kompl. | XLD Share 16", Left, Compl. |
| 11 | 4165 35042 09 | XLD Skär 18", Höger, Kompl. | XLD Share 18", Right, Compl. |
| 12 | 4165 35043 09 | XLD Skär 18", Vänster, Kompl. | XLD Share 18", Left, Compl. |
| 13 | 4165 35044 09 | XLD Skär 20", Höger, Kompl. | XLD Share 20", Right, Compl. |
| 14 | 4165 35045 09 | XLD Skär 20", Vänster, Kompl. | XLD Share 20", Left, Compl. |
| 15 | 4165 35060 09 | XLD Landsida främre, Höger, Kompl. | XLD Landside Forward, Right, Compl. |
| 16 | 4165 35061 09 | XLD Landsida Främre, Vänster, Kompl. | XLD Landside Forward, Left, Compl. |
| 17 | 4165 35062 09 | XLD Landsida Bakre, Höger, Kompl. | XLD Landside Rear, Right, Compl. |
| 18 | 4165 35063 09 | XLD Landsida Bakre, Vänster, Kompl. | XLD Landside Rear, Left, Compl. |
| 19 | 4165 35080 09 | XLD Bröst, Höger, Kompl. | XLD Chest, Right, Compl. |
| 20 | 4165 35081 09 | XLD Bröst, Vänster, Kompl. | XLD Chest, Left, Compl. |
| 21 | 4165 35024 09 | XSD Strimla nr 1, Höger | XSD Stripe no 1, Right |
| 22 | 4165 35025 09 | XSD Strimla nr 1, Vänster | XSD Stripe no 1, Left |
| 23 | 4165 35026 09 | XSD Strimla nr 2, Höger | XSD Stripe no 2, Right |
| 24 | 4165 35027 09 | XSD Strimla nr 2, Vänster | XSD Stripe no 2, Left |
| 25 | 4165 35028 09 | XSD Strimla nr 3, Höger | XSD Stripe no 3, Right |
| 26 | 4165 35029 09 | XSD Strimla nr 3, Vänster | XSD Stripe no 3, Left |
| 27 | 4165 35030 09 | XSD Strimla nr 4, Höger | XSD Stripe no 4, Right |
| 28 | 4165 35031 09 | XSD Strimla nr 4, Vänster | XSD Stripe no 4, Left |
| 29 | 4165 03612 21 | Skruv MFBKF 12x32-12.9 MW | Nib bolt MFBKF 12x32-12.9 MW |
| 30 | 4165 03613 03 | Mutter M6M 12x1,25-12 MW | Nut ISO - 8673 - M12 x 1,25-12 MW |
| 31 | 4165 35102 40 | XSD Stöd, Höger | XSD Support, Right |
| 32 | 4165 35103 40 | XSD Stöd, Vänster | XSD Support, Left |
| 33 | 4165 35093 00 | XSD Vändskivestötta Övre | XSD Mouldboard stay Upper |
| 34 | 4165 35091 00 | XSD Vändskivestötta Undre | XSD Mouldboard Stay Lower |
| 35 | 4165 03602 57 | Skruv MFBK 20x 60-10.9 MW | Nib bolt MFBK 20x 60-10.9 MW |
| 36 | 4165 03602 58 | Skruv MFBK 20x 75-10.9 MW | Nib bolt MFBK 20x 75-10.9 MW |
| 37 | 4731 23 26 51 | Mutter M6M 20-10 MW | Nut ISO - 4032 - M20-10 MW |
| 38 | 4165 03602 33 | Skruv MFBK 16x 40-10.9 MW | Nib bolt MFBK 16x 40-10.9 MW |
| 39 | 4731 23 24 01 | Mutter M6M 16- 8 FZB | Nut ISO - 4032 - M16-8 FZB |
| 40 | 4165 94289 09 | Slitplatta låg, kompl | Wearing plate low, cpl |
| 41 | 4165 94622 09 | Knivrist kompl, höger | Knife coulter cpl, RH |
| 42 | 4165 94623 09 | Knivrist kompl, vänster | Knife coulter cpl, LH |
| 43 | 4165 35112 09 | XLD Täckplåt ställ Kompl., Höger | XLD Cover plate Frog Compl., Right |
| 44 | 4165 35113 09 | XLD Täckplåt ställ Kompl. Vänster | XLD Frog protection plate Compl, Left |
| 45 | 4165 03612 24 | Skruv MFBKF 12x45-12.9 MW | Bolt MFBKF 12x45-12.9 MW |
| 46 | 4165 03602 23 | Skruv MFBK 12x 40-10.9 MW | Nib bolt MFBK 12x 40-10.9 MW |
| 47 | 4165 03615 05 | Mutter M6MF 12- 8 FZB | Nut ISO - 4161 - M12 FZB |
| 48 | 4165 85461 09 | Tiltvinge höger, kompl | Mouldboard extension RH, cpl |
| 49 | 4165 85462 09 | Tiltvinge vänster, kompl | Mouldboard extension LH, cpl |
| 50 | 4165 35118 01 | XSD Stag och fäste Kompl. Höger | XSD Stay and Bracket Compl. Right |
| 51 | 4165 35119 01 | XSD Stag och fäste Kompl. Vänster | XSD Stay and Bracket Compl. Left |

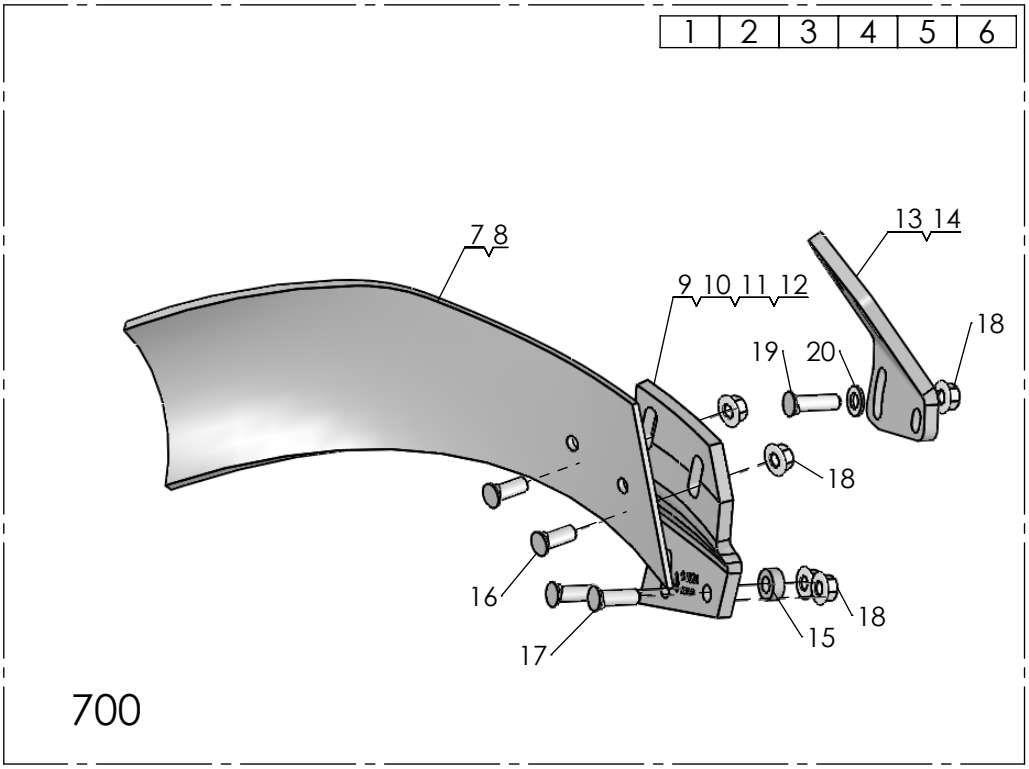
1 2 3 4 5 6
7 8
9 10 11 12
13 14
18
19
20
18
16
18
15
17
700

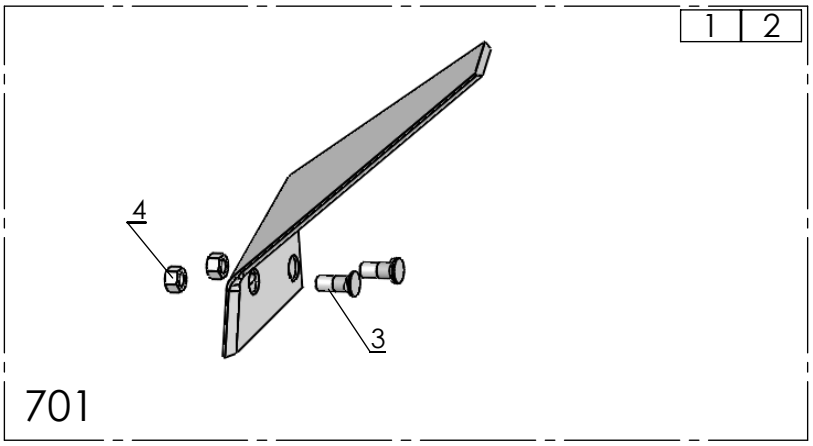
1 2
4
3
701

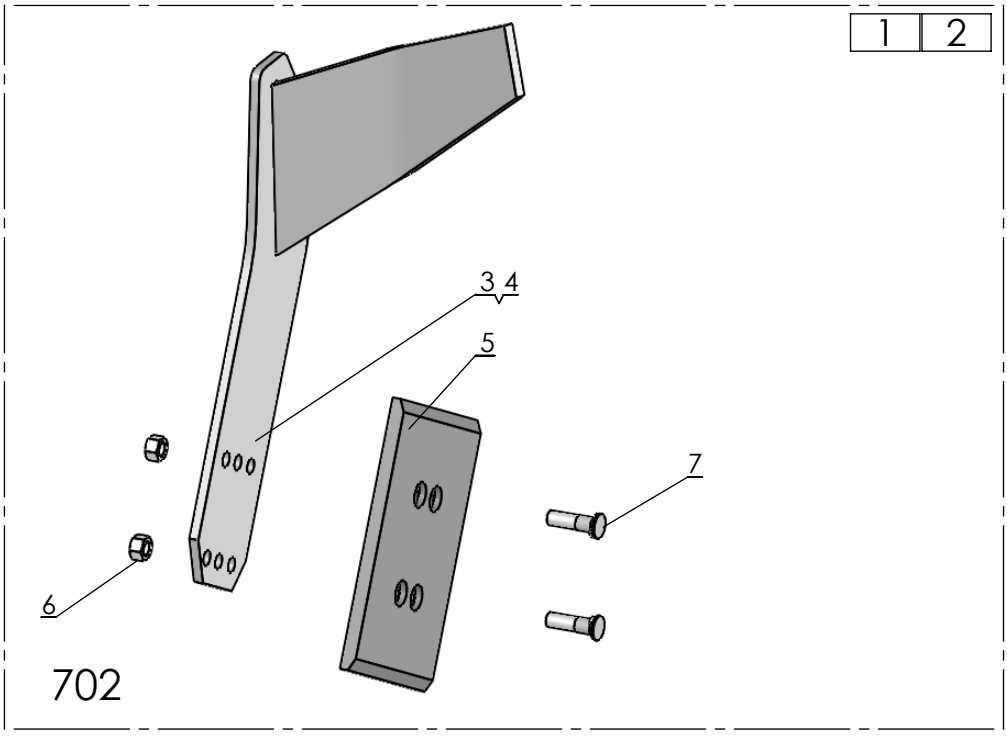
1 2
3 4
5
7
6
702



2018-08-29

| Pos nr/ Ref No | Detalj nr/ Part No | Benämning | Description |
|---|---|---|---|
| **700 Ö** | | **SKÄRVINGE** | **COVERBOARD** |
| 1 | 4165 94624 40 | Skärvingefäste XL/UC, höger | Bracket coverboard XL/UC, RH |
| 2 | 4165 94625 40 | Skärvingefäste XL/UC, vänster | Bracket coverboard XL/UC, LH |
| 3 | 4165 21337 40 | Skärvinge höger kompl, XU/XS | Coverboard cpl RH, XU/XS |
| 4 | 4165 21338 40 | Skärvinge vänster kompl, XU/XS | Coverboard LH cpl, XU/XS |
| 5 | 4165 96268 40 | Skärvinge höger kompl, XL/UC | Coverboard cpl RH, XL/UC |
| 6 | 4165 35114 00 | XLD Skärvinge Kompl. Höger | XLD Coverboard Compl. Right |
| 7 | 4165 35115 00 | XLD Skärvinge komplett, Vänster | XLD Coverboard Compl, Left |
| 8 | 4165 03602 22 | Skruv MFBK 12x 35-10.9 MW | Nib bolt MFBK 12x 35-10.9 MW |
| 9 | 4165 03615 05 | Mutter M6MF 12- 8 FZB | Nut ISO - 4161 - M12 FZB |
| 10 | 4165 03602 23 | Skruv MFBK 12x 40-10.9 MW | Nib bolt MFBK 12x 40-10.9 MW |
| 11 | 4165 89489 00 | Bricka, Ø13/25x10 | Washer, Ø13/25x10 |
| 12 | 4165 96269 40 | Skärvinge vänster kompl, XL/UC | Coverboard cpl LH, XL/UC |
| 13 | 4165 99627 40 | Skärvingefäste XU, XS, höger | Coverboard bracket XU, XS, RH |
| 14 | 4165 99628 40 | Skärvingefäste XU/XS, vänster, | Coverboard bracket XU/XS, LH |
| 15 | 4165 96064 09 | Skärvinge höger, kompl | Coverboard right, cpl |
| 16 | 4165 96065 09 | Skärvinge vänster, kompl | Coverboard left, cpl |
| 17 | 4165 35116 40 | XLD Fäste skärvinge, Höger | XLD Bracket Cover board, Right |
| 18 | 4165 35117 40 | XLD Fäste skärvinge, Vänster | XLD Bracket Cover board, Left |
| 19 | 4165 03602 24 | Skruv MFBK 12x 45-10.9 MW | Nib bolt MFBK 12x 45-10.9 MW |
| 20 | 4734 11 78 01 | Bricka BRB 13x 24 FZB | Washer ISO 7089 - 12 FZB |

| Pos nr/ Ref No | Detalj nr/ Part No | Benämning | Description |
|---|---|---|---|
| **701 Ö** | | **FÅRBREDDARE** | **FURROW WIDENING KNIFE** |
| 1 | 4165 95678 09 | Fårbreddare höger, kompl | Furrow knife RH, cpl |
| 2 | 4165 95679 09 | Fårbreddare vänster, kompl | Furrow knife LH, cpl |
| 3 | 4165 03612 21 | Skruv MFBKF 12x32-12.9 MW | Nib bolt MFBKF 12x32-12.9 MW |
| 4 | 4165 03613 03 | Mutter M6M 12x1,25-12 MW | Nut ISO - 8673 - M12 x 1,25-12 MW |

| Pos nr/ Ref No | Detalj nr/ Part No | Benämning | Description |
|---|---|---|---|
| **702 Ö** | | **FÅRBREDDARE** | **FURROW WIDENING KNIFE** |
| 1 | 4165 24789 00 | Fårbreddare komplett sats, höger | Furrow knife compl, RH |
| 2 | 4165 24790 00 | Fårbreddare komplett sats, vänster | Furrow knife compl, LH |
| 3 | 4165 23868 40 | Fårbreddare, höger | Furrow knife, RH |
| 4 | 4165 23867 40 | Fårbreddare, vänster | Furrow knife, LH |
| 5 | 4165 94289 09 | Slitplatta, låg | Wearing plate, low |
| 6 | 4165 03613 03 | Mutter M6M 12x1,25-12 MW | Nut ISO - 8673 - M12 x 1,25-12 MW |
| 7 | 4165 03612 24 | Skruv MFBKF 12x45-12.9 MW | Bolt MFBKF 12x45-12.9 MW |

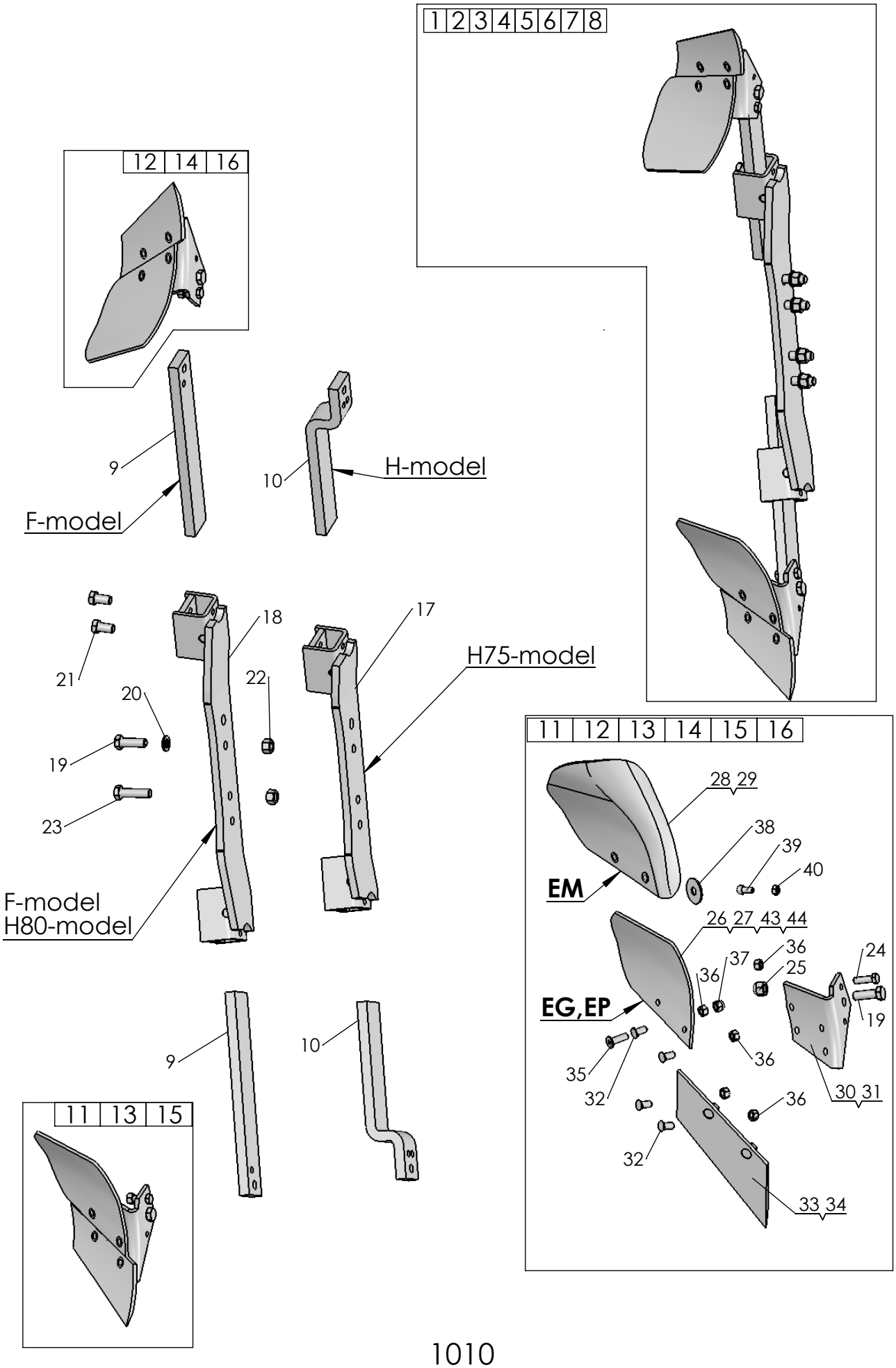


1010



2018-08-29

| Pos nr/ Ref No | Detalj nr/ Part No | Benämning | Description |
|---|---|---|---|
| **1010 Ö** | | **SKUMRIST** | **SKIMMER** |
| 1 | 4165 30316 90 | EP-rist F, kompl | EP-skimmer F, cpl |
| 2 | 4165 30111 90 | EG-rist F, kompl | EG-skimmer F, cpl |
| 3 | 4165 32902 90 | EP-rist H kort, kompl | EP-skimmer H short, cpl |
| 4 | 4165 32901 90 | EG-rist H kort, kompl | EG-skimmer H short, cpl |
| 5 | 4165 32903 90 | EM-rist H kort, kompl | EM-skimmer H short, cpl |
| 6 | 4165 32980 90 | EP-rist H lång, kompl | EP-skimmer H long, cpl |
| 7 | 4165 32977 90 | EG-rist H lång, kompl | EG-skimmer H long, cpl |
| 8 | 4165 32981 90 | EM-rist H lång, kompl | EM-skimmer H long, cpl |
| 9 | 4165 29166 90 | Skumristskaft F, rakt | Skimmer shaft F, stright |
| 10 | 4165 32636 90 | Skumristskaft H | Skimmer shaft H |
| 11 | 4165 99049 40 | Rist EP, höger | Skimmer EP, RH |
| 12 | 4165 99050 40 | Rist EP, vänster | Skimmer EP, LH |
| 13 | 4165 98260 40 | Rist EG, höger | Skimmer EG, RH |
| 14 | 4165 98261 40 | Rist EG, vänster | Skimmer EG, LH |
| 15 | 4165 24423 40 | Rist EM, höger | Skimmer EM, RH |
| 16 | 4165 24424 40 | Rist EM, vänster | Skimmer EM, LH |
| 17 | 4165 32571 90 | Skumristhållare, kort | Skimmer bracket, short |
| 18 | 4165 29174 90 | Skumristhållare, lång | Skimmer bracket, long |
| 19 | 4165 20377 00 | Skruv, M6S 16x50-10.9 MW | Bolt, M6S 16x50-10.9 MW |
| 20 | 4734 11 86 01 | Bricka BRB 17x30 FZB | Washer ISO 7089 - 16 |
| 21 | 4725 26 24 81 | Skruv M6S 16x30-MW | Bolt ISO 4014 - M16 x 30-10.9 MW |
| 22 | 4731 23 24 51 | Mutter M6M 16-10 MW | Nut ISO-4032 M16-10 MW |
| 23 | 4725 26 32 81 | Skruv M6S 16x 60-10.9 MW | Bolt ISO 4014 M16x60-10.9 MW |
| 24 | 4165 20376 00 | Brytbult, M12x40-10.9 MW | Shear bolt, M12x40-10.9 MW |
| 25 | 4732 21 24 51 | Mutter M6M 16- 8 NF FZB | Nut ISO 7040-M16-8-NF FZB |
| 26 | 4165 91803 09 | Vändskiva EG höger, kompl | Mouldboard E RH, cpl |
| 27 | 4165 91804 09 | Vändskiva EG vänster, kompl | Mouldboard EG LH, cpl |
| 28 | 4165 24421 09 | Vändskiva EM höger, kompl | Mouldboard EM RH, cpl |
| 29 | 4165 24422 09 | Vändskiva EM vänster, kompl | Mouldboard EM LH, cpl |
| 30 | 4165 98258 40 | Ställ EG-EP-EM, höger | Frog EG-EP-EM, RH |
| 31 | 4165 98259 40 | Ställ EG-EP-EM, vänster | Frog EG-EP-EM, LH |
| 32 | 4165 03602 21 | Skruv MFBK 12x 28-10.9 MW | Nib bolt MFBK 12x 28-10.9 MW |
| 33 | 4165 91801 09 | Skär E höger, kompl | Share E RH, cpl |
| 34 | 4165 91802 09 | Skär E vänster, kompl | Share E LH, cpl |
| 35 | 4725 65 40 01 | Skruv MF6S 12x 40- 8.8 FZB | Bolt ISO 10642 - M12 x 40-8.8 FZB |
| 36 | 4731 23 22 01 | Mutter M6M 12- 8 FZB | Nut ISO - 4032 - M12-8 FZB |
| 37 | 4732 21 22 51 | Mutter M6M 12- 8 NF FZB | Nut ISO 7040-M12-8-NF FZB |
| 38 | 4165 25921 00 | Självhäftande packning | Rubber washer |
| 39 | 4725 54 91 01 | Skruv MC6S 10x 20- 8.8 FZB | Bolt ISO 4762- M10x20- 8.8 FZB |
| 40 | 4731 23 20 01 | Mutter M6M 10- 8 FZB | Nut Hexagon Nut ISO - 4032 - M10-8 FZB |
| 43 | 4165 92085 09 | Vändskiva EP höger, kompl | Mouldboard EP RH, cpl |
| 44 | 4165 92086 09 | Vändskiva EP vänster, kompl | Mouldboard EP LH, cpl |

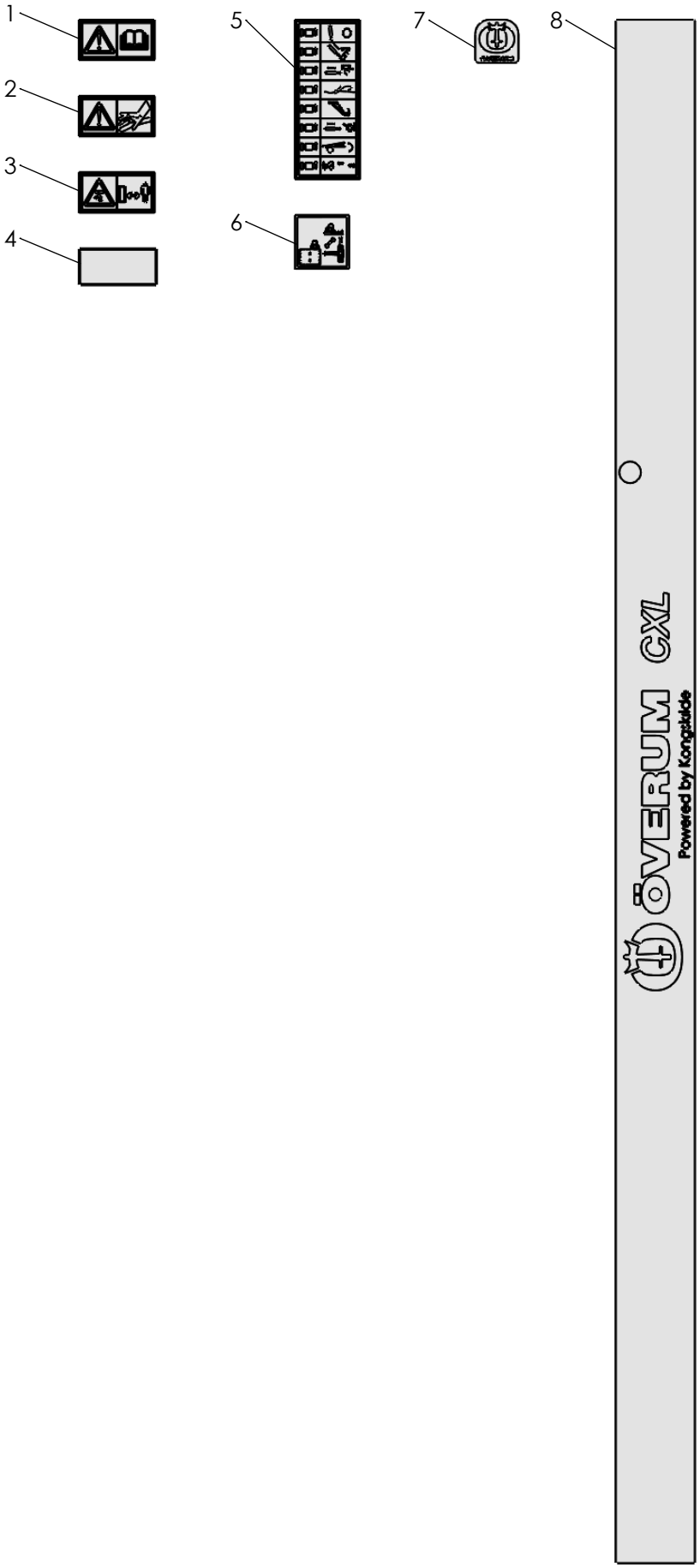


1319



2018-11-13

| Pos nr/<br>Ref No | Detalj nr/<br>Part No | Benämning | Description |
|---|---|---|---|
| **1319 Ö** | **34881** | **DEKALER CXL** | **DECALS CXL** |
| 1 | 4165 99101 00 | Dekal: Läs instruktionsboken | Decal: Read instruction manual |
| 2 | 4165 98300 00 | Dekal: Högt oljetryck | Decal: High pressure fluid-injection into body |
| 3 | 4165 98301 00 | Dekal: Arbetsområde | Decal: Stay a safe distance from the machine |
| 4 | 4165 97077 00 | Reflex | Reflex |
| 5 | 4165 23591 00 | Dekal: Färgmärkning, delburenplog | Decal: Colour marking, plough |
| 6 | 4165 34889 00 | Dekal: Transportläge, ventil | Decal: Transport position, valve |
| 7 | 4165 34754 00 | Dekal: ÖVERUM logo, h=43 | Decal: ÖVERUM logo, h=43 |
| 8 | 4165 34891 00 | Dekal: ÖVERUM CXL | Decal: ÖVERUM CXL |

From serial No. 18 300626

4165 68007 93 – 2018-12-21

You can always find the latest version of the manuals at www.kongskilde.com